Monolithic discriminator dual
QD21.4-4000/01

VECTRON INTERNATIONAL
A DOVER TECHNOLOGIES COMPANY

Application

- 2 pol resonator
- discriminator
- use in mobile and stationary transceivers

Limiting values		**Unit**	**Value**
Center frequency	fo	MHz	21.4
Peak separarion		kHz	± 20
Sym. resonance frequency	fs at 25°C	MHz	21.38 ± 600 Hz
Asym. resonance frequency	fa at 25°C	MHz	21.42 ± 1200 Hz
Change of sy. resonance frequency	-40...+80°C	ppm	< 30
Dynamical capacity C1		fF	~ 3.9
Terminating impedance Z	Test circuit		
R1 || C1		Ohm/pF	12.5
R2 || C2		Ohm/pF	12.5
Operating temp. range		° C	-40...+80

Characterstics QD10.7-2800/01

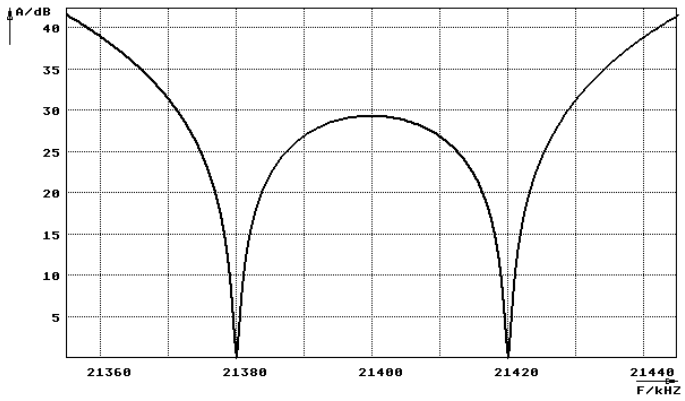

Application circuits

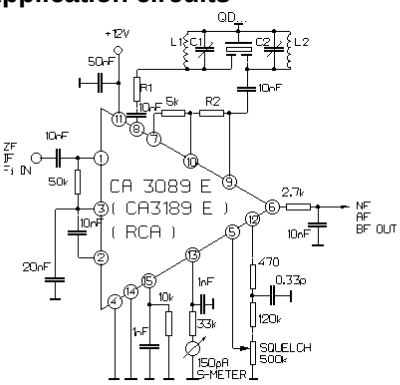

R1 = 2.4 kΩ
R2 = 2.4 kΩ
L1; L2 = 5µH
C1; C2 = 0.8...10 pF

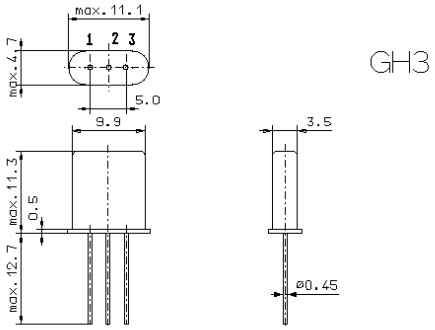

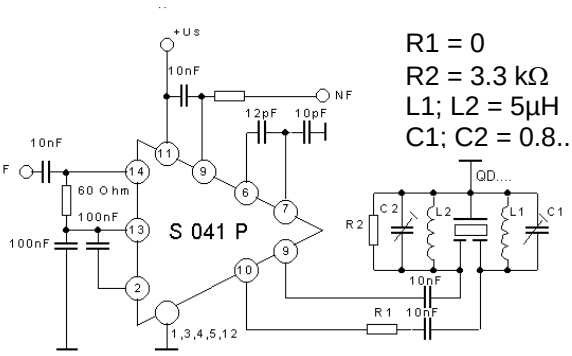

R1 = 0
R2 = 3.3 kΩ
L1; L2 = 5µH
C1; C2 = 0.8...10 pF

TELE FILTER Zweigniederlassung der DOVER Germany GMBH 30.01.03
Potsdamer Str. 18 D- 14513 Teltow ☎ (+49)03328-4784-10 ; Fax (+49)03328-4784-30 http:\\www.vectron.com