International
IOR Rectifier

*January 15, 2003 Rev 2.1*

# IRACV201

# Complete Motion Control Verilog Library
# Accelerator™ Verilog Code Development Tool

## Features

- **Accelerator™ architecture AC servo development system**
- **ServoDesigner™ graphical user interface for configuration, control and monitoring**
- **Verilog code library grouped into three segments:**
  - **FOC blocks**
  - **Motion peripheral blocks**
  - **Communication blocks**
- **Bilinear transformation based discretization**
- **Rapid prototyping with Accelerator™ Hardware Platform**

## Product Summary

| | |
|---|---|
| Flexible Target Silicon | FPGA or ASIC |
| Field Orientation Control execution | 4 usec (135 sysclk) |
| Versatile PWM module | Sine or Space Vector PWM |
| Communication options | Fast SPI (5 MHz), UART (57.6K or 1Mbit) |

## Description

IRACV201 is a Verilog code development tool including a rich Verilog library and graphical user interface. The tool set is designed to facilitate motion control algorithm development including motion peripheral and communication modules. Flexible configuration allows the user to quickly realize hardware on an FPGA to achieve a high performance AC motor control system.

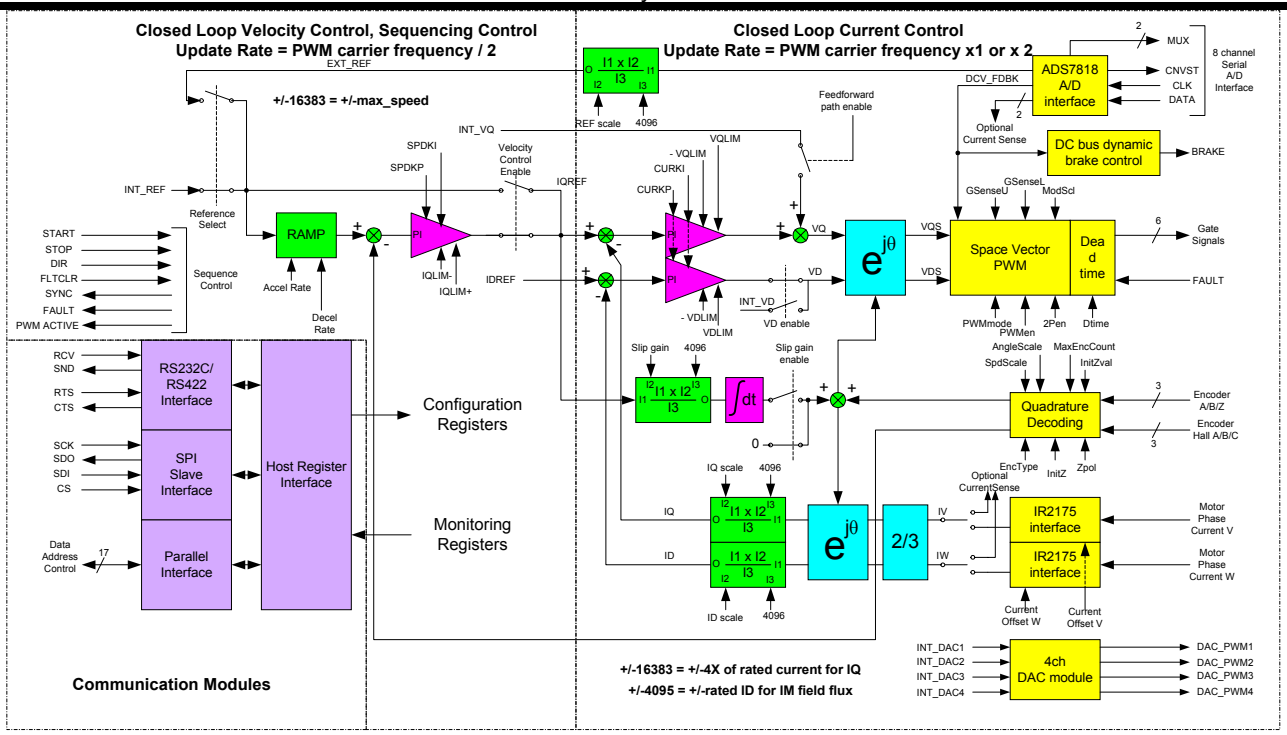


This document is the property of International Rectifier and may not be copied or distributed without expressed consent.