BIT MAP LCD DRIVER

■ GENERAL DESCRIPTION

The NJU6450A is a bit map LCD driver to display graphics or characters.

It contains 2,560 bit display data RAM, microprocessor interface circuits, instruction decoder, and 16-common and 61-segment drivers.

The bit image display data sent from 8- or 16-bit MPU are stored in the display data RAM and drives Dot Matrix LCD Panel by the common and segment drivers.

The 16-common and 61-segment drivers can drive graphics or 12-character 2-line with icon data.

The NJU6450A can combine with the NJU6450A or 6451A to expand the display capacity to 32 x 122 dots or 16 x 141 dots of graphics or character display by using the extension function of NJU6450A.

Furthermore, the incorporated CR oscillator required minimum external component and the wide operating voltage, low current consumption are useful apply to the small sized battery operated items.

■ PACKAGE OUTLINE

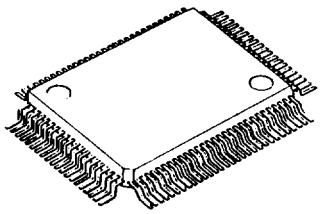

NJU6450AF

5

■ FEATURES

- Direct Correspondence between Display Data RAM and LCD Pixel
- Display Data RAM - 2,560 bits 80 x 8 x 4
- Direct Interface with 8- or 16-bit MPU
  (Both of 68 and 80 type MPU can connect directly)
- Extension Function (can combine with NJU6450A or 6451A)
- Read Out From the Display Data RAM
- 16-common and 61-segment Drivers
- Programmable Duty Ratio ; 1/16 or 1/32 Duty
- Useful Instruction Set
  Display Data Read/Write, Display ON/OFF Cont, Display Data RAM Address Set, Status Read, Display Starting Line Set, Static Drive ON/OFF, Duty Ratio Setting, and Read Modify Write,
- Low Power Consumption
- Incorporated CR Oscillator
- Operating Voltage --- 2.4V~6.0V
- LCD Driving Voltage --- 3.0V~13.5V
- Package Outline --- QFP 100 / Chip
- C-MOS Technology

■ PIN CONFIGURATION

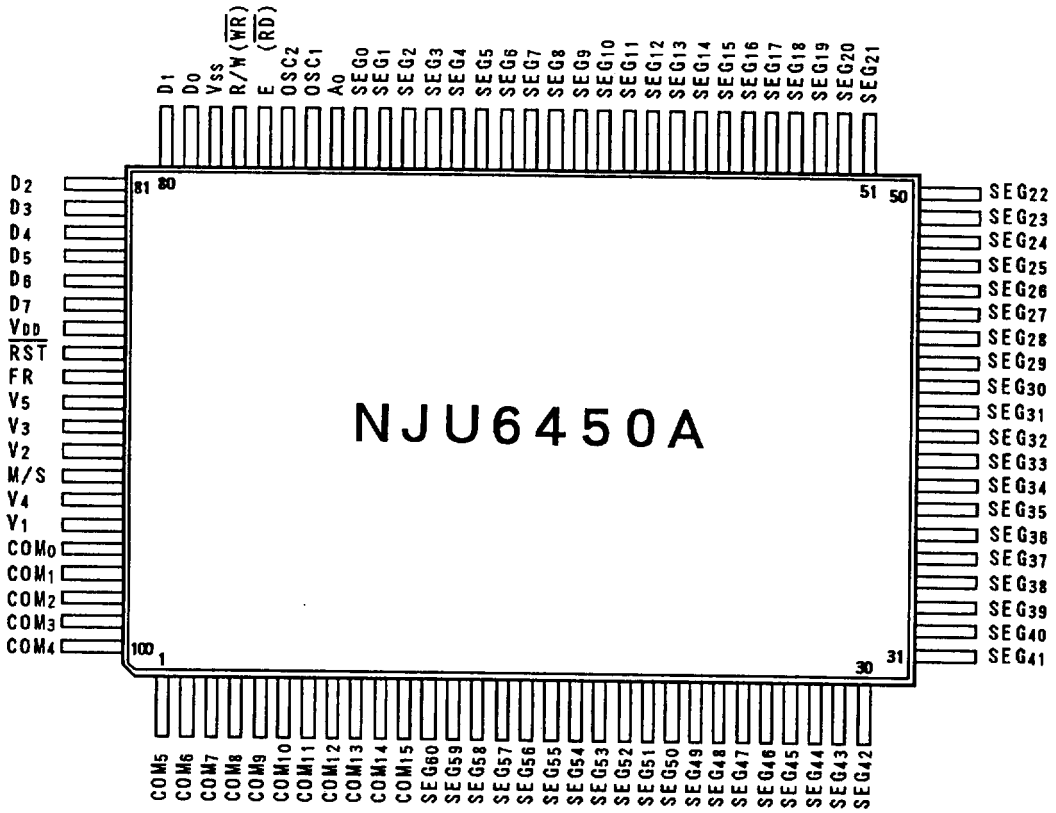

5

■ BLOCK DIAGRAM

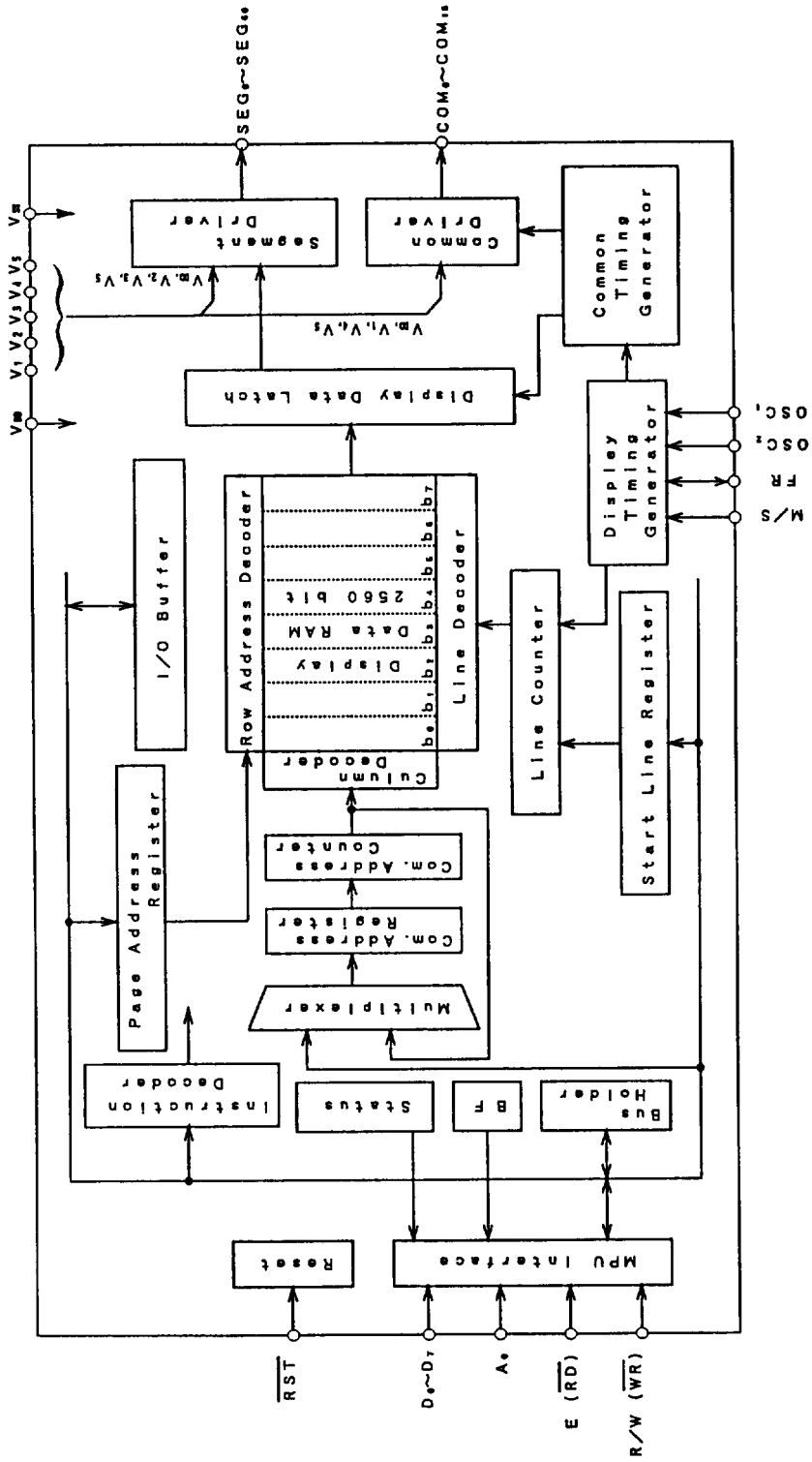

■ PAD LOCATION

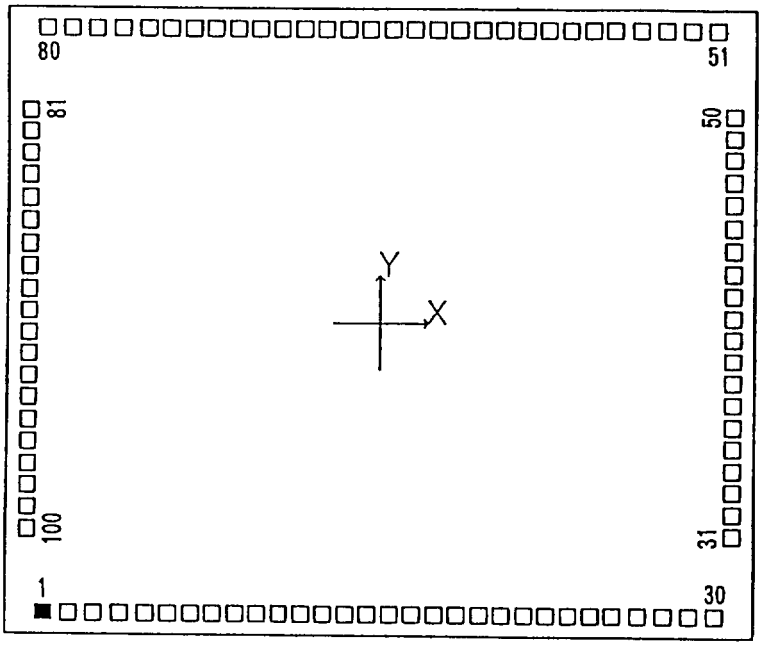

Chip Center	X=0um, Y=0um
Chip Size	4860um x 4160um
Chip Thickness	400um ± 30um
Pad Size	92um x 92um

■ PAD COORDINATES

Chip Size 4860um x 4160um(Chip Center X=0um,Y=0um)

No.	Terminal Name	X=(um)	Y=(um)
1	COM_5	-2130	-1865
2	COM_6	-1970	-1865
3	COM_7	-1810	-1865
4	COM_8	-1650	-1865
5	COM_9	-1490	-1865
6	COM_{10}	-1330	-1865
7	COM_{11}	-1190	-1865
8	COM_{12}	-1050	-1865
9	COM_{13}	- 910	-1865
10	COM_{14}	- 770	-1865
11	COM_{15}	- 630	-1865
12	SEG_{60}	- 490	-1865
13	SEG_{59}	- 350	-1865
14	SEG_{58}	- 210	-1865
15	SEG_{57}	- 70	-1865
16	SEG_{56}	70	-1865
17	SEG_{55}	210	-1865
18	SEG_{54}	350	-1865
19	SEG_{53}	490	-1865
20	SEG_{52}	630	-1865
21	SEG_{51}	770	-1865
22	SEG_{50}	910	-1865
23	SEG_{49}	1050	-1865
24	SEG_{48}	1190	-1865
25	SEG_{47}	1330	-1865
26	SEG_{46}	1490	-1865
27	SEG_{45}	1650	-1865
28	SEG_{44}	1810	-1865
29	SEG_{43}	1970	-1865
30	SEG_{42}	2130	-1865
31	SEG_{41}	2213	-1354
32	SEG_{40}	2213	-1214
33	SEG_{39}	2213	-1074
34	SEG_{38}	2213	- 934
35	SEG_{37}	2213	- 794
36	SEG_{36}	2213	- 654
37	SEG_{35}	2213	- 514
38	SEG_{34}	2213	- 374
39	SEG_{33}	2213	- 234
40	SEG_{32}	2213	- 94
41	SEG_{31}	2213	46
42	SEG_{30}	2213	186
43	SEG_{29}	2213	326
44	SEG_{28}	2213	466
45	SEG_{27}	2213	606
46	SEG_{26}	2213	746
47	SEG_{25}	2213	886
48	SEG_{24}	2213	1026
49	SEG_{23}	2213	1166
50	SEG_{22}	2213	1306

No.	Terminal Name	X=(um)	Y=(um)
51	SEG_{21}	2130	1865
52	SEG_{20}	1970	1865
53	SEG_{19}	1810	1865
54	SEG_{18}	1650	1865
55	SEG_{17}	1490	1865
56	SEG_{16}	1330	1865
57	SEG_{15}	1190	1865
58	SEG_{14}	1050	1865
59	SEG_{13}	910	1865
60	SEG_{12}	770	1865
61	SEG_{11}	630	1865
62	SEG_{10}	490	1865
63	SEG_9	350	1865
64	SEG_8	210	1865
65	SEG_7	70	1865
66	SEG_6	- 70	1865
67	SEG_5	- 210	1865
68	SEG_4	- 350	1865
69	SEG_3	- 490	1865
70	SEG_2	- 630	1865
71	SEG_1	- 770	1865
72	SEG_0	- 910	1865
73	A_0	-1050	1865
74	OSC_1	-1190	1865
75	OSC_2	-1330	1865
76	E	-1490	1865
77	R／W	-1650	1865
78	V_{SS}	-1810	1865
79	DB_0	-1970	1865
80	DB_1	-2130	1865
81	DB_2	-2213	1330
82	DB_3	-2213	1190
83	DB_4	-2213	1050
84	DB_5	-2213	910
85	DB_6	-2213	770
86	DB_7	-2213	630
87	V_{DD}	-2213	490
88	$\overline{RST}$	-2213	350
89	FR	-2213	210
90	V_5	-2213	70
91	V_3	-2213	- 70
92	V_2	-2213	- 210
93	M／S	-2213	- 350
94	V_4	-2213	- 490
95	V_1	-2213	- 630
96	COM_0	-2213	- 770
97	COM_1	-2213	- 910
98	COM_2	-2213	-1050
99	COM_3	-2213	-1190
100	COM_4	-2213	-1330

* Pad Size 92um x 92um

5

■ Terminal Description

No.	Symbol	Function
87	V_{DD}	Power Supply : V_{DD}=+5V
78	V_{SS}	GND : V_{SS}= 0V
95,92 91,94,90	V_5,V_4 V_3,V_2,V_1	LCD Driving Voltage Supplying Terminal. Following relation must be maintained. $V_{DD} \geqq V_1 \geqq V_2 \geqq V_3 \geqq V_4 \geqq V_5$
74 75	OSC_1 OSC_2	Oscillation Resistance (Rf) Connecting Terminal. For external clock operation, the clock should be input from OSC_2.
76	E ($\overline{RD}$)	<When connect to the 68 type MPU> Connect to Enable Clock Input Terminal of 68 type MPU. Active "H". <When connect to the 80 type MPU> Connect to $\overline{RD}$ Signal Input Terminal of 80 type MPU. Active "L" During this terminal is "L", the Data Bus is output state.
77	R/W ($\overline{WR}$)	<When connect to the 68 type MPU> Connect to READ/WRITE Control Signal Input Terminal of 68 type MPU. R/W: H = Status, L = Read, Write <When connect to the 80 type MPU> Connect to $\overline{WR}$ Signal connecting terminal of 80 type MPU. Active "L". The data on the Data Bus is fetch at the rising edge of this signal.
73	A0	Connect to the Address Bus of MPU. The data on the D_0~D_7 is distinguished between Display Data and Instruction by this signal. A0: H = Display Data, L = Instruction (Data)
79~86	D_0~D_7	Tri-state bilateral Data Bus. The data transmission between 8- or 16-bit MPU and NJU6450A is executed by this Bus.
89	FR	Alternating signal for LCD Driving output or input terminal. Output or input is determined by master or slave mode which selected by M/S terminal. M/S: Master = Output, Slave = Input (FR)
96~100 1~11	COM_0 ~COM_4 (COM_{31}~COM_{27}) COM_5 ~COM_{15} (COM_{26}~COM_{16}) (Note)	Common output terminal. One output level out of V_{DD}, V_1, V_4, V_5 is selected by combination of FR and data of common counter. FR: H — Data H → Output V_5, Data L → Output V_1; L — Data H → Output V_{DD}, Data L → Output V_4
72~12	SEG_0 ~SEG_{60}	Segment output terminal. One output level out of V_{DD}, V_2, V_3, V_5 is selected by combination of FR and data of Display RAM. FR: H — Data H → Output V_{DD}, Data L → Output V_2; L — Data H → Output V_5, Data L → Output V_3
88	$\overline{RST}$	Reset and Interface type select terminal. The reset operation is performed by rise or fall edge of this signal. The input level after initialization selects the interface type of 68 or 80 type of MPU. 68 Type: Rise → H; 80 Type: Fall → L
93	M/S (Note)	Master or Slave operation selecting terminal. Connect to V_{DD} or V_{SS}. M/S=V_{DD} : Master , M/S=V_{SS} : Slave The function of FR, COM_0~COM_{15}, OSC_1, and OSC_2 is changed by M/S. Master: FR Out, Common Output COM_0 ~COM_{15}, OSC_1 In, OSC_2 Out Slave: FR In, Common Output COM_{31}~COM_{16}, OSC_1 NC, OSC_2 In

(Note) The common scanning order of slave LSI is inverted against the master LSI.

■ Functional Description

(1) Description for each blocks

(1-1) Busy Flag (BF)

When the internal circuits are in the operation mode, the busy flag(BF) is "1", and any instruction except the status read are inhibited.
The busy flag is output at D_7 terminal when status read instruction is executed.
If enough cycle time over than t_{CYC} is kept, no need to check the busy flag.

(1-2) Display Start Line Register

The Display Start Line Register is a pointer register which indicate the address in the Display Data RAM corresponded with COM_0 (normally it display the top line in the LCD Panel).
This register can use for scroll the screen, change the display page and so on.
The Display Start Line instruction set the display start address of the Display Data RAM represented in 5-bit to this register.

(1-3) Line Counter

The Display Start Address stored in the Display Start Line Register is set to the Line Counter when the FR signal out from the NJU6450A is chenging.
The Line Counter count up by synchronizing common signal out from NJU6450A and generate the line address which addressing the read out line of Display Data RAM.

(1-4) Column Address Counter

The column address counter is 7-bit presettable counter which addressing the column address as shown as Fig. 1.
This counter increments "1" up to 50H when the Display Data Read/Write instruction is executed. The count up is stop at 50H (over 50H is non existing address) automatically by the count lock function.
Furthermore, this counter is independent with the Page Register.

(1-5) Page Register

This register gives page address of Display Data RAM as shown Fig. 1.
When the MPU access the data by changing the page, the page address set instruction is required.

(1-6) Display Data RAM

Display Data Ram consist of 2,560 bits stores the bit image display data (each bit correspond to the each pixel so called bit map method). This RAM and MPU are operating independently, therefore, there is
no influence by the unsynchronize rewriting.
The each bit in the Display Data RAM correspond to the each dot of the LCD panel.

On = "1"
Off = "0"

The relation between column address and segment output can inverse by the Address Inverse Instruction ADC as shown Fig. 1.

(1-7) Timing Generator

This Generator generates the common timing and frame signal for 1/16 and 1/32 duty selecting by Duty Select Instruction from the master clock.
In the case of the 1/32 duty, 2 chip of master and slave chip should be combined, and both of common are synchronized by the common multi-chip method. (Refer the figure shown below)

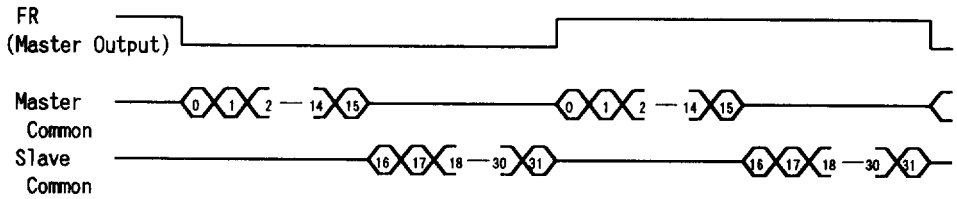

(1-8) Display Data Latch

Display Data Latch stores 80-bit of one line display data for each common cycle which read out from the Display Data RAM temporary and transfer this data to the LCD Driver.
The Display On/Off and Static Drive On/Off controls the latched data only, therefore, the data in the Display Data RAM is no change and keep on remaining.

(1-9) LCD Driving Circuits

This Driver is consists of 80-multiplexer which output the 4-level of LCD driving voltage.
The output waveform is determined by the combination of the data in the Display Data Latch, Common Timing Generator and FR signal

(1-10) Display Timing Generator

This Generator generates the timing signal for the display system by combination of the master clock and Frame Driving Signal FR. The Frame Driving Signal FR has a function to generate the 2 frame alternative driving method waveform for the LCD panel, and synchronizing the line counter and common timing generator to the master LSI. Therefore, the FR signal must be 50% duty ratio clock signal which synchronized with the frame signal.

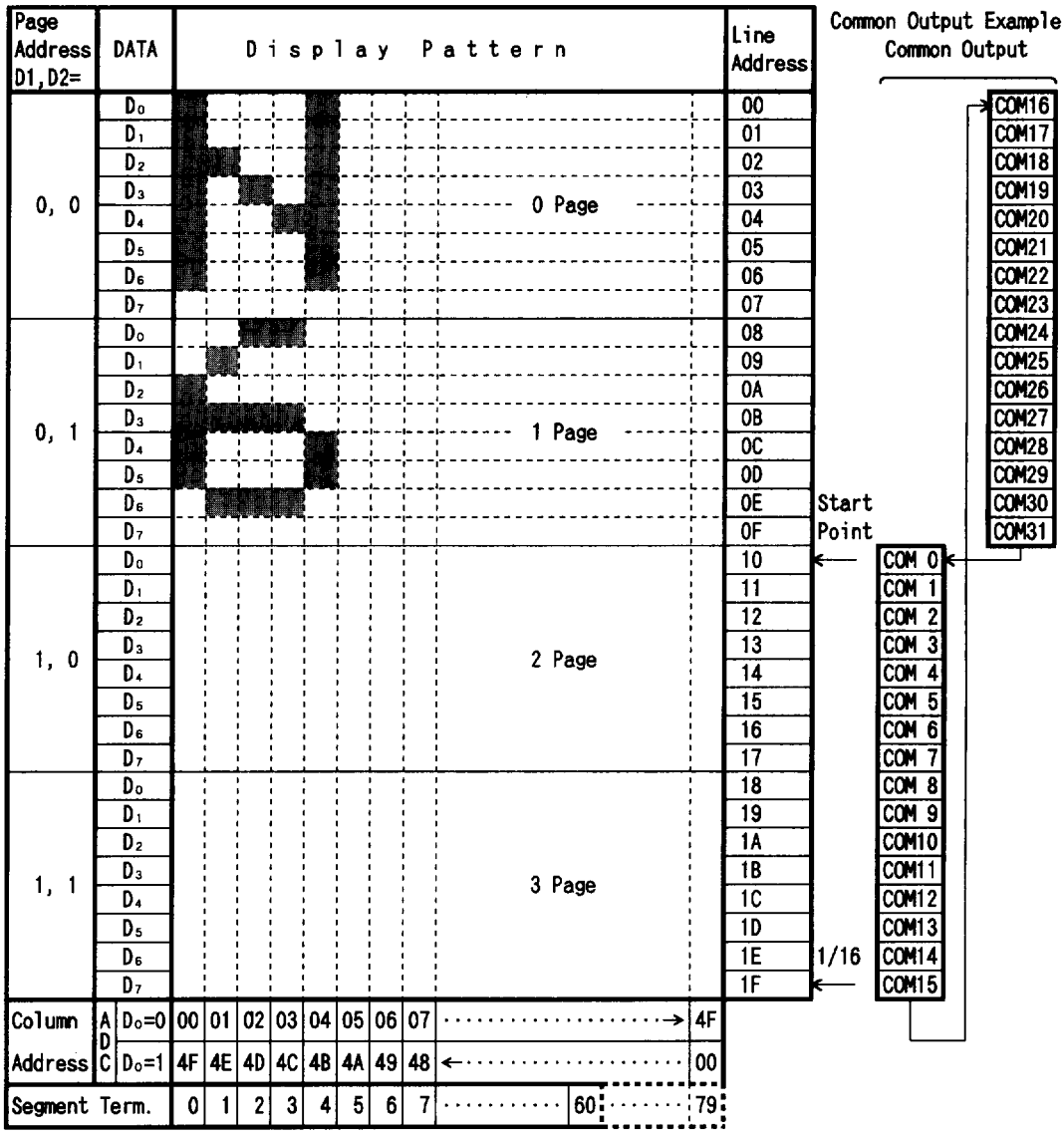

Fig. 1. Correspondence with Display Data RAM and address (For example the display start line is 10th and 1/32 duty)

(1-11) Oscillating Circuits

This Oscillator is a low power type CR oscillator which generates the master clock.
The oscillation frequency is adjusted by the external resistance of Rf only as shown below.
When the external clock operation, the same phase clock of OSC_2 of master LSI must be input to the OSC_2 terminal of slave LSI .

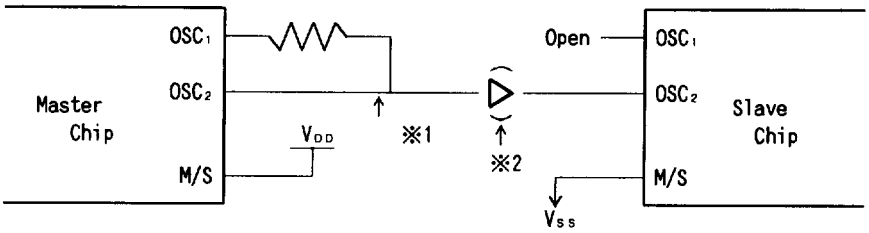

※1 The Rf value should be smaller than the recommended value as the oscillation frequency becomes low, if the storage capacitance of this portion is high.
※2 The C-MOS buffer is required if the master LSI drives 2 or more slave LSI.

(1-12) Reset Circuits

The NJU6450A performs following initialization by detecting the rising or falling edge of the $\overline{RST}$ input after the power turns on.

Initialization
① Display Off
② Set the 1st line to the Display Start Register
③ Static Drive Off
④ Set the address "0" to the Column Address Counter
⑤ Set the page "3" to the Page Address Register
⑥ Select the 1/32 duty
⑦ Select the ADC : Counterclockwise output
(ADC instruction D_0 = "0", ADC status flag "1")
⑧ Read Modify Write Mode Off

The $\overline{RST}$ terminal input level is used to select the interface of 80 or 68 type MPU as shown in Table. 2. Therefore, the "H" level input through the inverter is required when connecting the 80 type MPU, and "L" level input is required when connecting the 68 type MPU as shown in application circuits 1.
The $\overline{RST}$ terminal must be connect to the Reset Terminal of MPU and reset at same time with it.
The dead-lock may occur if the no initialization by the $\overline{RST}$ terminal when the power terns on.
By the RESET instruction, the initialization of ② and ⑤ mentioned above are executed.

(2) Instruction

The NJU6450A distinguish the signal on the data bus by combination of A0 and R/W($\overline{RD}$,$\overline{WR}$).
Normally, the busy check is not required as the NJU6450A is operating so first because of the decode of the instruction and execution are performs only depend on the internal timing which not depend on the external clock.
The Table. 1 shows the instruction codes of the NJU6450A.

Table 1. Instruction Code

Instruction	Code											Description	
	A0	$\overline{RD}$	$\overline{WR}$	D_7	D_6	D_5	D_4	D_3	D_2	D_1	D_0		
Display On / Off	0	1	0	1	0	1	0	1	1	1	0/1	Whole Display On/Off. 1:On,0:Off(Power Save mode if the static Drive On)	
Display Start Line	0	1	0	1	1	0	Display Start Address (1~31)					Determine the Display Line correspond to the COM_0.	
Page Address Set	0	1	0	1	0	1	1	1	0	Page (0~3)		Set the Page of Disp. Data RAM to the Page Register.	
Column Address Set	0	1	0	0	Column Address (0~79)							Set the Column Address of Display Data RAM to the Column Register.	
Status Read	0	0	1	BUSY	ADC	ON/OFF	RESET	0	0	0	0	Read the status. BUSY 1:Working 0:Ready ADC 1:Clockwise Output 0:Counterclockwise ON/OFF 1:Disp Off 0:Disp On RESET 1:Reset 0:Normal	
Write Display Data	1	1	0	Write Data								Write the data to the Display Data RAM.	Access the predetermined address of the Display Data RAM. The Column address increment "1" after read or write.
Read Display Data	1	0	1	Read Data								Read the data from the Display Data RAM.	
ADC Select	0	1	0	1	0	1	0	0	0	0	0/1	Determine the clockwise or counterclockwise reading of the Display Data RAM. 0:Clockwise Output 1:Counterclockwise Output	
Static Drive On / Off	0	1	0	1	0	1	0	0	1	0	0/1	Select the Dynamic or Static Driving. 1:Static Driving (Power Saving) 0:Dynamic Driving	
Duty Ratio Select	0	1	0	1	0	1	0	1	0	0	0/1	Select the duty ratio. 1:1/32 Duty 0:1/16 Duty	
Read Modify Write	0	1	0	1	1	1	0	0	0	0	0	Increment the Column Address register when writing but no-change when reading.	
End	0	1	0	1	1	1	0	1	1	1	0	Release from the Read Modify Write Mode.	
Reset	0	1	0	1	1	1	0	0	0	1	0	Set the Display Start Line Register to 1st line, Page Add. Register to "3".	
Power Save (Dual Command)	0 0	1 1	0 0	1 1	0 0	1 1	0 0	1 0	1 1	1 0	0 1	Set the power save mode by selecting Display Off and Static Driving On.	

5

(3) Explanation of Instruction Code.

(a) Display On/Off

This instruction executes whole display On/Off no relation with the data in the Display Data RAM and internal conditions.

	A0	$\overline{RD}$	R/W $\overline{WR}$	D_7	D_6	D_5	D_4	D_3	D_2	D_1	D_0
Code	0	1	0	1	0	1	0	1	1	1	D

D 0 : Display On
1 : Display Off

When the static driving mode is selected (static drive On) in display Off status, the internal circuits put on the power save mode.

(b) Display Start Line

This instruction set the line address as shown Fig. 1. The selected line in the Display Data RAM correspond to the COM_0 which display at the top of LCD panel.
The display area is set automatically from the selected line to the line which increased the number of duty ratio.
Therefore, the smooth scroll for vertical direction by changing the start line address one by one or page switching are available by this instruction.

	A0	$\overline{RD}$	R/W $\overline{WR}$	D_7	D_6	D_5	D_4	D_3	D_2	D_1	D_0
Code	0	1	0	1	1	0	A_4	A_3	A_2	A_1	A_0

A_4	A_3	A_2	A_1	A_0	Line Address
0	0	0	0	0	0
				1	1
1	1	1	1	0	1E
1	1	1	1	1	1F

(c) Page Address Set

When MPU access the Display Data RAM, the page address corresponded to the row address must be selected.
The access in the Display Data RAM is available by setting the page and column address. (Refer the Fig. 1.)
The display is no change when the page address is changed.

	A0	$\overline{RD}$	R/W $\overline{WR}$	D_7	D_6	D_5	D_4	D_3	D_2	D_1	D_0
Code	0	1	0	1	0	1	1	1	0	A_1	A_0

A_1	A_0	Page
0	0	0
0	1	1
1	0	2
1	1	3

(d) Column Address Set

This instruction set the column address in the Display Data RAM.(See Fig.1.)
When the MPU access the Display Data RAM continuously, the column address increase "1" automatically, therefore, the MPU can access the data only without address setting.
The increment of the column address is stopped by the address of 50_H automatically, but the page address is no change even if the column address increase to 50_H and stop.

	A0	$\overline{RD}$	R/W $\overline{WR}$	D_7	D_6	D_5	D_4	D_3	D_2	D_1	D_0
Code	0	1	0	0	A_6	A_5	A_4	A_3	A_2	A_1	A_0

A_6	A_5	A_4	A_3	A_2	A_1	A_0	Column Add.
0	0	0	0	0	0	0	0
0	0	0	0	0	0	1	1
1	0	0	1	1	1	0	4E
1	0	0	1	1	1	1	4F

(e) Status Read

This instruction read out the internal status.

	A0	$\overline{RD}$	R/W $\overline{WR}$	D_7	D_6	D_5	D_4	D_3	D_2	D_1	D_0
Code	0	0	1	BUSY	ADC	ON/OFF	RESET	0	0	0	0

BUSY : BUSY=1 indicate the operating or the Reset cycle.
The instruction can be input after the BUSY status change to "0".

ADC : Indicate the output correspondence of column(segment) address and segment driver.
0 :Counterclockwise Output(Inverse) Column Address 79-n ←→ Segment Driver n
1 :Clockwise Output (Normal) Column Address n ←→ Segment Driver n

ON/OFF : Indicate the whole display On/Off status.
0 : Whole Display "On"
1 : Whole Display "Off"
(Note) The data "0=On" and "1=Off" of Display On/Off status read out is inverted with the Display On/Off instruction data of "1=On" and "0=OFf".

RESET : Indicate the initialization period by $\overline{RST}$ signal or reset instruction.
0 : —
1 : Initialization Period

(f) Write Display Data

This instruction write the 8-bit data on the data bus into the Display Data RAM.
The column(segment) address increase "1" automatically when writing, therefore, the MPU can write the 8-bit data into the Display Data RAM without address setting.

	A0	$\overline{RD}$	R/W $\overline{WR}$	D_7	D_6	D_5	D_4	D_3	D_2	D_1	D_0
Code	1	1	0	Write Data							

(g) Read Display Data

This instruction read out the 8-bit data from Display Data RAM which addressed by the column and page address. In case of the Read Modify Write Mode is Off, the column address increase "1" automatically after each read out, therefore, the MPU can read out the 8-bit data from the Display Data RAM continuously without address setting.
One time of dummy read must be required after column address set as explain in (4-3).

	A0	$\overline{RD}$	R/W $\overline{WR}$	D_7	D_6	D_5	D_4	D_3	D_2	D_1	D_0
Code	1	0	1	Read Data							

(h) ADC Select

This instruction set the correspondence of column address in the Display Data RAM and segment driver output. (See Fig. 1.) Therefore, the order of segment output can be changed by the software, and no restriction of the LSI placement against the LCD panel.

	A0	$\overline{RD}$	R/W $\overline{WR}$	D_7	D_6	D_5	D_4	D_3	D_2	D_1	D_0
Code	0	1	0	1	0	1	0	0	0	0	D

D 0 : Clockwise Output (Inverse)
1 : CounterClockwise Output (Normal)

(i) Static Drive On/Off

This instruction executes the all common output terns on and whole display on obligatory.

	A0	$\overline{RD}$	R/W $\overline{WR}$	D_7	D_6	D_5	D_4	D_3	D_2	D_1	D_0
Code	0	1	0	1	0	1	0	0	1	0	D

D 0 : Static Drive Off (Normal Operation)
1 : Static Drive On (Whole Display Turns On)

When the Display Off mode is selected (Display Off) in Static Drive On status, the internal circuits put on the power save mode.

(j) Duty Select

This instruction set the LCD driving duty ratio.

	A0	$\overline{RD}$	R/W $\overline{WR}$	D_7	D_6	D_5	D_4	D_3	D_2	D_1	D_0
Code	0	1	0	1	0	1	0	1	0	0	D

D 0 : 1/16 duty
1 : 1/32 duty

(k) Read Modify Write

After this instruction is executed, the column address increase "1" automatically when Display Data Write Instruction execution, but the address is not changed when the Display Data Read Instruction execution.
This status continues during End instruction execution. When the End instruction is entered the column address back to the address where Read Modify Write instruction entering.
By this function, the load of MPU for example cyclic data writing operation like as cursor blink etc., can be reduced.

	A0	$\overline{RD}$	R/W $\overline{WR}$	D_7	D_6	D_5	D_4	D_3	D_2	D_1	D_0
Code	0	1	0	1	1	1	0	0	0	0	0

Note) During the Read Modify Write mode, any instruction except Column Address Set can be executed.

(l) Sequence of cursor display

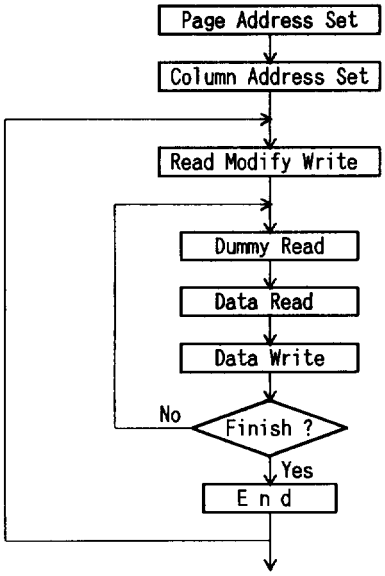

(m) End

This instruction release the Read Modify Write mode and the column address back to the address where the read modify write mode setting.

	A0	$\overline{RD}$	R/W $\overline{WR}$	D_7	D_6	D_5	D_4	D_3	D_2	D_1	D_0
Code	0	1	0	1	1	1	0	1	1	1	0

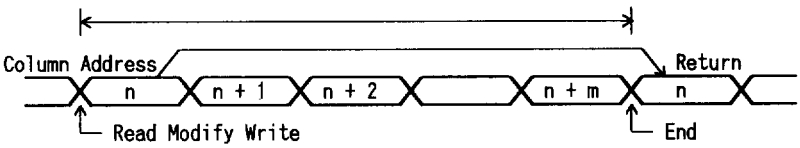

(n) Reset

This instruction executes the following initialization.

Initialization

① Set the 1st line in the Display Start Line Register.
② Set the page 3 in the Page Register.

In this time, there are no influence to the Display Data RAM.

	A0	$\overline{RD}$	R/W $\overline{WR}$	D_7	D_6	D_5	D_4	D_3	D_2	D_1	D_0
Code	0	1	0	1	1	1	0	0	0	1	0

The reset signal input to the $\overline{RST}$ terminal must be required for the initialization when the power terns on.

(Note) The initialization when the power turns on can not be executed by Reset instruction.

(o) Power Save(Dual Command)

When both of Display Off and Static Drive On are executed, the internal circuits put on the power save mode and the current consumption is reduced as same as stand by current.
The internal status in this mode are as follows;

① Stop the LCD driving. Segment and Common drivers output V_{DD} level.
② Stop the oscillation or inhibit the external clock input. Then the terminal OSC_2 becomes floating status.
③ Keeping the display data and operating mode.

The power save mode is released by Display on or static drive off instruction.
To reduce the total power consumption, the current flow on the bleeder resistance must be cut by the transistor etc. during the power save mode as shown below.

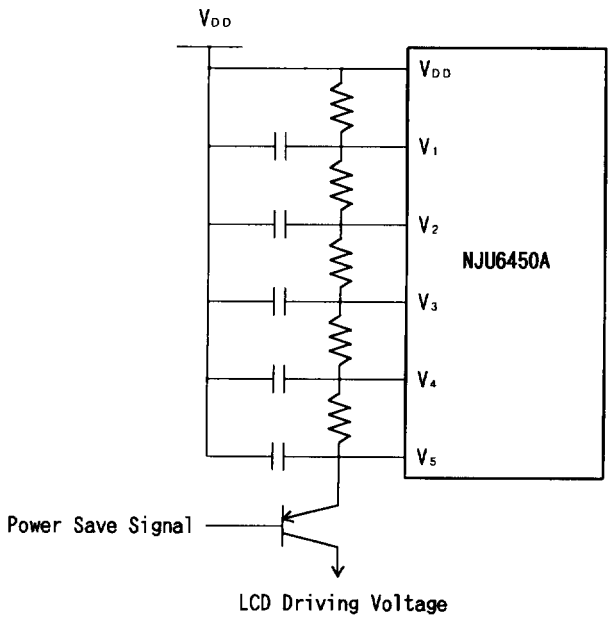

(4) MPU Interface

(4-1) 68 or 80 type MPU interface selection.
The NJU6450A can interface both of 68 or 80 type MPU bus directly by setting the $\overline{RST}$ level after reset instruction entered as shown Table. 2.
The data transfer is executed between D_0~D_7 of NJU6450A and the MPU data bus.

Table. 2.

Level of $\overline{RST}$	Type of MPU	A0	E	R/W	D_0~D_7
"L"	68 type	↑	↑	↑	↑
"H"	80 type	↑	$\overline{RD}$	$\overline{WR}$	↑

(4-2) Discrimination of the data bus signal.
The NJU6450A discriminates the data bus signal by combination of A0, E($\overline{RD}$), and R/W($\overline{WR}$) signals as shown Table. 3.

Table. 3.

Common	68 type	80 type		Function
A0	R/W	$\overline{RD}$	$\overline{WR}$	
1	1	0	1	Display Data Read out
1	0	1	0	Display Data Write
0	1	0	1	Status Read
0	0	1	0	Command Input to the Register

(4-3) Access to the Display Data RAM and Internal Register.
The NJU6450A is operating as one of Pipe-line processor by the bus-holder connecting to the internal data bus to adjust the operation frequency between MPU and the Display Data RAM or Internal Register.
For example, when the MPU write the data into the Display Data RAM, the data is held in the bus-holder at once then write into the Display Data RAM by next data write cycle.
Therefore high speed data transmission between MPU and NJU6450A is available because of the limitation of access time of NJU6450A locking from MPU is just determined by the cycle time only which ignored the access time of t_{ACC} and t_{DS} of Display Data RAM.
If the cycle time can not be kept in the MPU operation, NOP operation cycle must be insert which equivalent to the waiting operation.
Please note that the read out data is a address data when the read out execution just after the address setting. Therefore, one dummy read is required after address setting or write cycle as shown in Fig. 2.

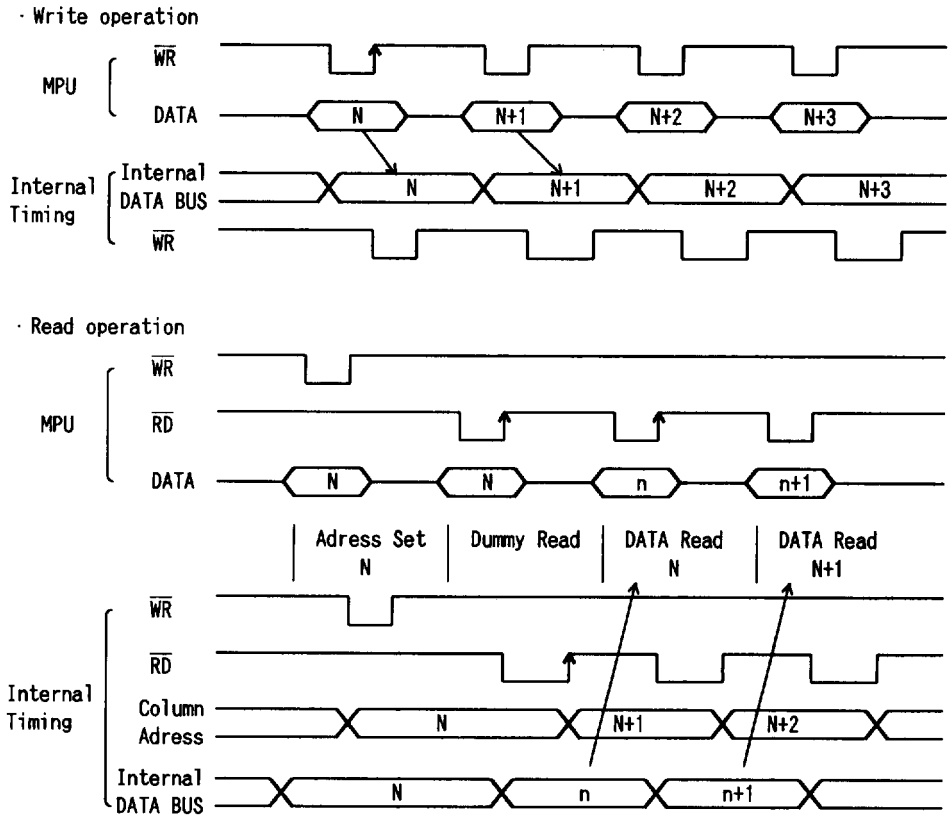

Fig.2 MPU Interface Timing

■ ABSOLUTE MAXIMUM RATINGS

(Ta=25°C)

PARAMETER	SYMBOL	RATINGS	UNIT
Supply Voltage (1)	V_{DD}	- 0.3 ~ + 7.0	V
Supply Voltage (2)	V_1~V_5 (3)	V_{DD}-13.5 ~ V_{DD}+0.3	V
Input Voltage	V_{IN}	- 0.3 ~ V_{DD}+0.3	V
Operating Temperature	Topr	- 30 ~ + 80	°C
Storage Temperature	Tstg	- 55 ~ + 125	°C

Note 1) If the LSI are used on condition above the absolute maximum ratings, the LSI may be destroyed. Using the LSI within electrical characteristics is strongly recommended for normal operation. Use beyond the electric characteristics conditions will cause malfunction and poor reliability.

Note 2) All voltage values are specified as V_{SS} = 0 V.

Note 3) The relation : $V_{DD} \geqq V_1 \geqq V_2 \geqq V_3 \geqq V_4 \geqq V_5$ must be maintained.

■ ELECTRICAL CHARACTERISTICS

(V_{DD}=5V±10%, V_{SS}=0V, Ta=-20~+75°C)

PARAMETER		SYMBOL	CONDITIONS		MIN	TYP	MAX	UNIT	Note
Operating Voltage(1)	Recommend	V_{DD}			4.5	5.0	5.5	V	
	Available				2.4		6.0		4
Operating Voltage(2)	Recommend	V_5			V_{DD}-13.5		V_{DD}-3.5	V	
	Available				V_{DD}-13.5				
	Available	V_1,V_2	V_{LCD}=V_{DD}-V_5		V_{DD}-0.6xV_{LCD}		V_{DD}		
	Available	V_3,V_4			V_5		V_{DD}-0.4xV_{LCD}		
Input Voltage	1	V_{IHT}	A0, D_0~D_7, E, R/W Terminals		2.0		V_{DD}	V	
		V_{ILT}			V_{SS}		0.8		
	2	V_{IHC}	OSC_2, FR, M/S, $\overline{RST}$ Terminals		0.8xV_{DD}		V_{DD}		
		V_{ILC}			V_{SS}		0.2xV_{DD}		
Output Voltage		V_{OHT}	D_0~D_7 Terminals	I_{OH}=-3.0mA	2.4			V	
		V_{OLT}		I_{OL}= 3.0mA			0.4		
	1	V_{OHC1}	FR Terminal	I_{OH}=-2.0mA	2.4				
		V_{OLC1}		I_{OL}= 2.0mA			0.4		
	2	V_{OHC2}	OSC_2 Terminal	I_{OH}=-120uA	0.8xV_{DD}				
		V_{OLC2}		I_{OL}= 120uA			0.2xV_{DD}		
Input Leakage Current		I_{LI}	A0,E,R/W,OSC_1,OSC_2,$\overline{RST}$		-1.0		1.0	uA	
		I_{LO}	D_0~D_7, FR Terminals		-3.0		3.0		5
Driver On-resistance		R_{ON}	SEG,COM Term Ta=25°C	V_5=V_{DD}-5.0V		5.0	7.5	kΩ	6
				V_5=V_{DD}-3.5V		10.0	50.0		
Stand-by Current		I_{DDQ}	M/S=V_{SS}, OSC_2=FR=V_{DD}			0.05	1.0	uA	
Operating Current		I_{DD1}	Display V_5=-5.0V,Rf=1MΩ			9.5	15.0	uA	
		I_{DD2}	Accessing, tcyc=200kHz			300	500		7
Oscillation Freq.		fosc	Rf=1MΩ±2%		15	18	21	kHz	
Reset time		t_r	$\overline{RST}$ Terminal		1.0		1000	us	

Note 4) NJU6450A can operate wide operating range, but it is not guarantee immediate voltage changing during the accessing of the MPU.

Note 5) Apply to the High-impedance state of D0 to D7 and FR terminals.
Note 6) R_{ON} is the resistance values between power supply terminals(V_1,V_2,V_3,V_4) and each output terminals of common and segment supplied by 0.1V.
Note 7) The IDD2 is specified under the condition of cyclic(tcyc)inverted data input continuously. The operating current during the accessing is proportionate to the frequency of tcyc. In the no accessing it is as same as IDD1.

■ BUS TIMING CHARACTERISTICS

· Read / Write operation sequence (68 Type MPU)
(V_{DD}=5.0V±10%,V_{SS}=0V,Ta=-20～+75°C)

PARAMETER			SYMBOL	MIN	MAX	CONDITION	UNIT
Address Set Up Time		A0, R/W Terminals	t_{AW6}	20			ns
Address Hold Time			t_{AH6}	10			
System Cycle Time			t_{CYC6}	1000			
Enable Pulse Width	Read	E Terminal	t_{EW}	100			
	Write			80			
Data Set Up Time		D_0～D_7 Terminals	t_{DS6}	80			
Data Hold Time			t_{DH6}	10			
Access Time			t_{ACC6}		90	C_L=100pF	
Output Disable Time			t_{CH6}	10	60		

Note 8) Input signal rise time(t_r) and fall time(t_f) are less than 15ns.

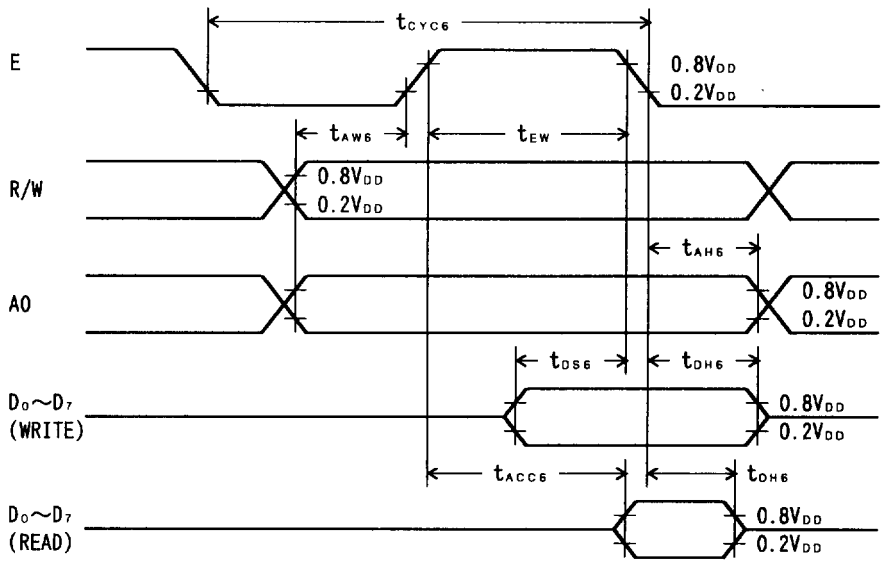

fig.3 Bus Read / Write operation sequence (68 Type MPU)

· Read / Write operation sequence (80 Type MPU)

(V_{DD}=5.0V±10%, V_{SS}=0V, Ta=-20～+75°C)

PARAMETER		SYMBOL	MIN	MAX	CONDITION	UNIT
Address Set Up Time	A0	t_{AW8}	20			ns
Address Hold Time	Terminal	t_{AH8}	10			
System Cycle Time	$\overline{RW}$, $\overline{WR}$	t_{CYC8}	1000			
Control Pulse Width	Terminals	t_{CC}	200			
Data Set Up Time		t_{DS8}	80			
Data Hold Time	D_0～D_7	t_{DH8}	10			
RD Access Time	Terminals	t_{ACC8}		90	C_L=100pF	
Output Disable Time		t_{CH8}	10	60		

Note 9) Input signal rise time(t_r) and fall time(t_f) are less than 15ns.

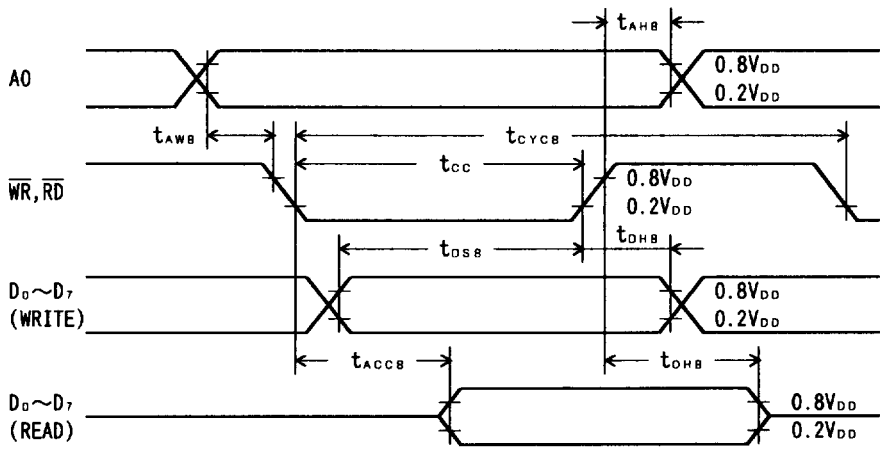

fig.4 Bus Read / Write operation sequence (80 Type MPU)

· Display control timing characteristics (Both of 68 and 80 type MPU)

Input Timing (V_{DD}=5.0V±10%, V_{SS}=0V, Ta=-20～+75°C)

PARAMETER	SYMBOL	MIN	TYP	MAX	CONDITION	UNIT
"L" level Pulse Width	t_{WLOSC2}	35				us
"H" level Pulse Width	t_{WHOSC2}	35				
Rise Time	t_r		30	150		ns
Fall Time	t_f		30	150		
FR Delay Time (NJU6450A Slave)	t_{DFR}	-2.0		2.0		us

Output Timing

PARAMETER	SYMBOL	MIN	TYP	MAX	CONDITION	UNIT
FR Delay Time (NJU6450A Master)	t_{DFR}		0.2	0.4	C_L=100pF	us

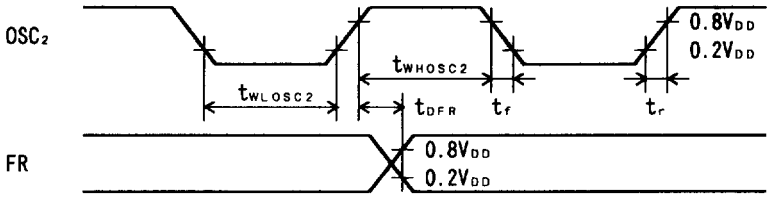

fig.5 Display control timing characteristics

■ LCD DRIVING WAVEFORM

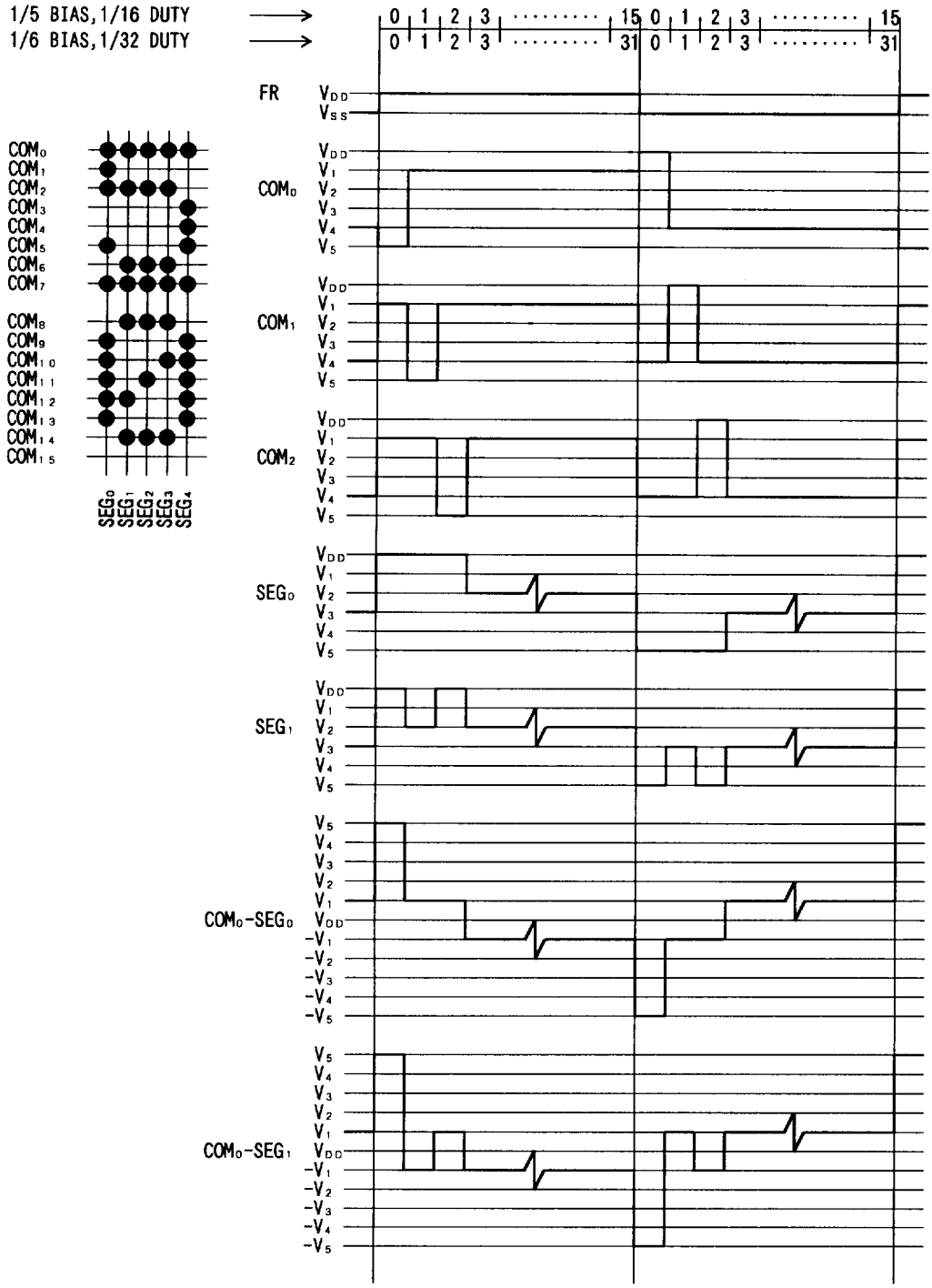

■ APPLICATION CIRCUITS 1

· 68 type MPU Interface

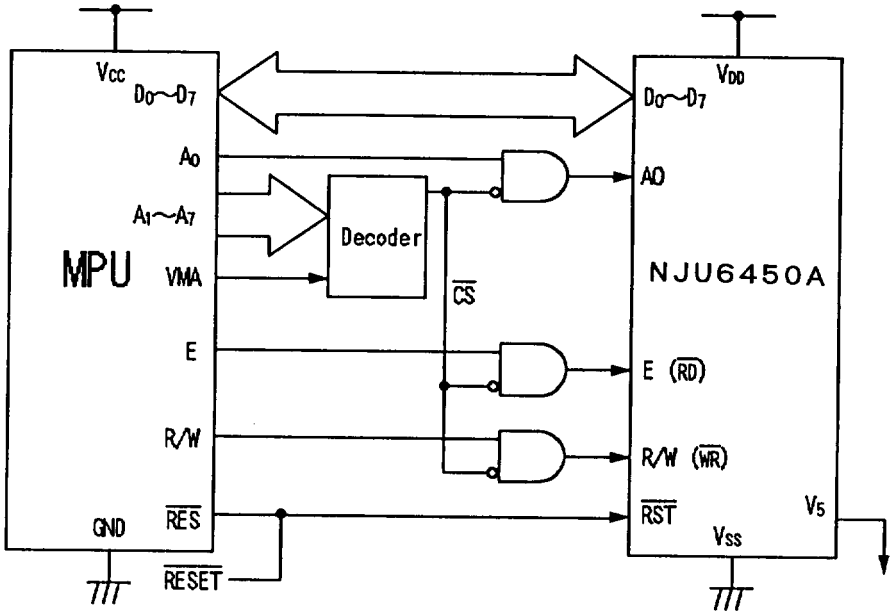

· 80 type MPU Interface

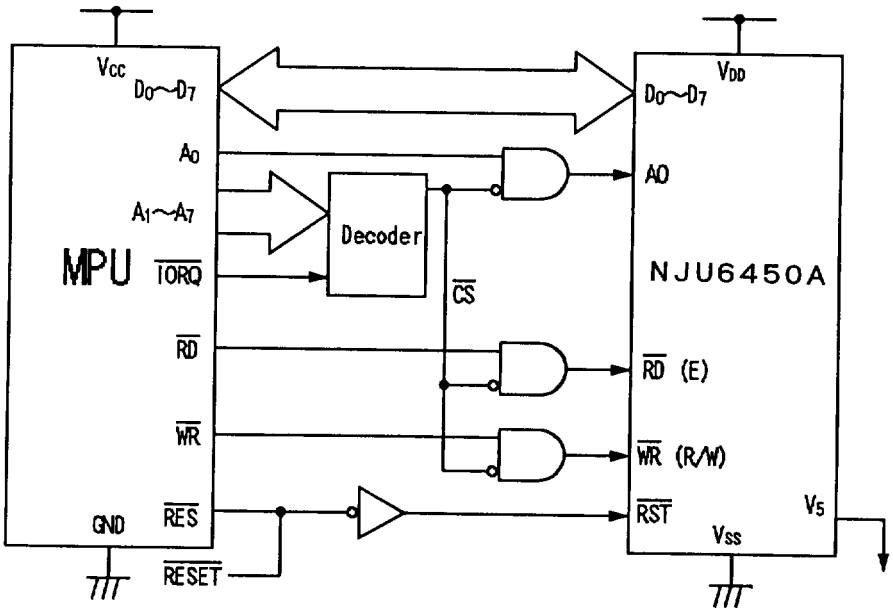

■ APPLICATION CIRCUITS 2

(1) 16 x 61 dots Driving Application Circuits (NJU6450A Single Operation)

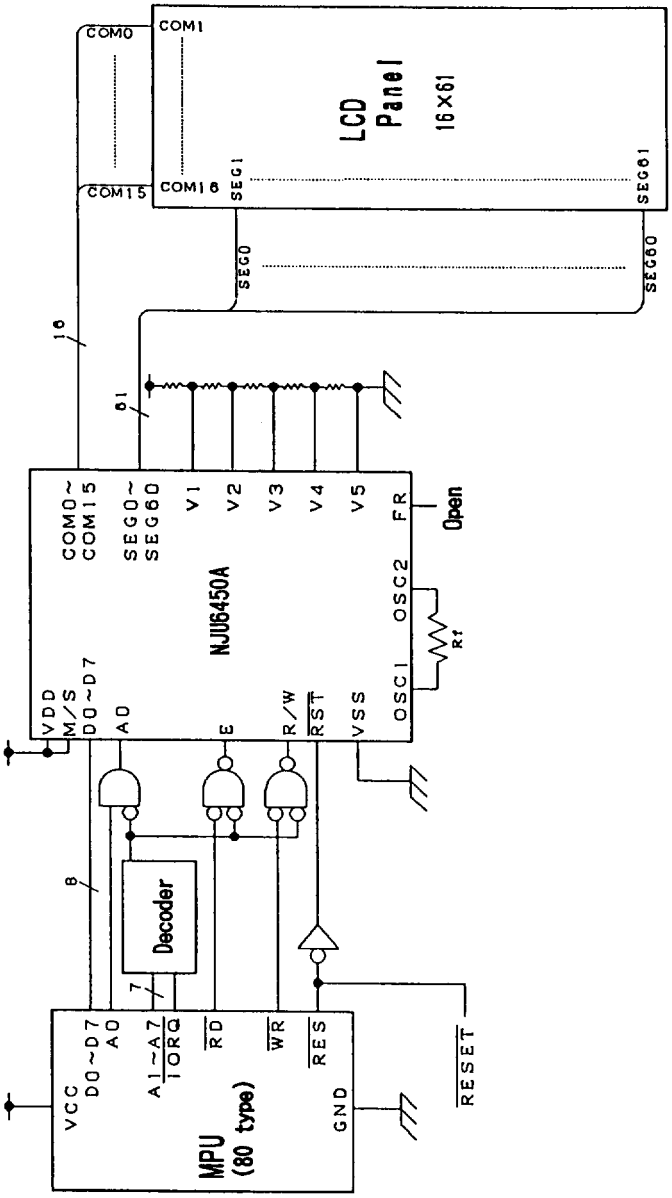

(2) 32 x 122 dots Driving Application Circuits
(Common and Segment Drivers Extension by using two of NJU6450A)

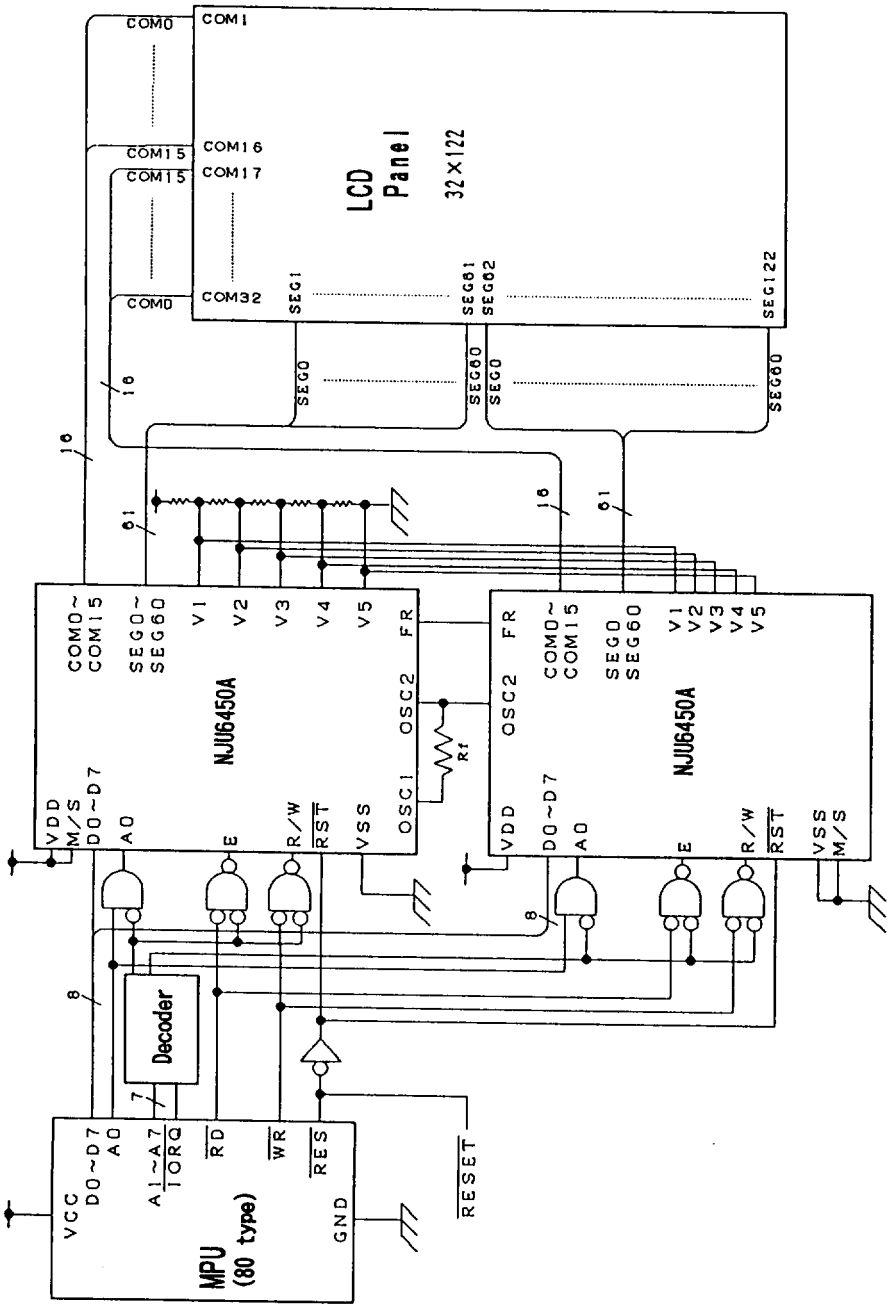
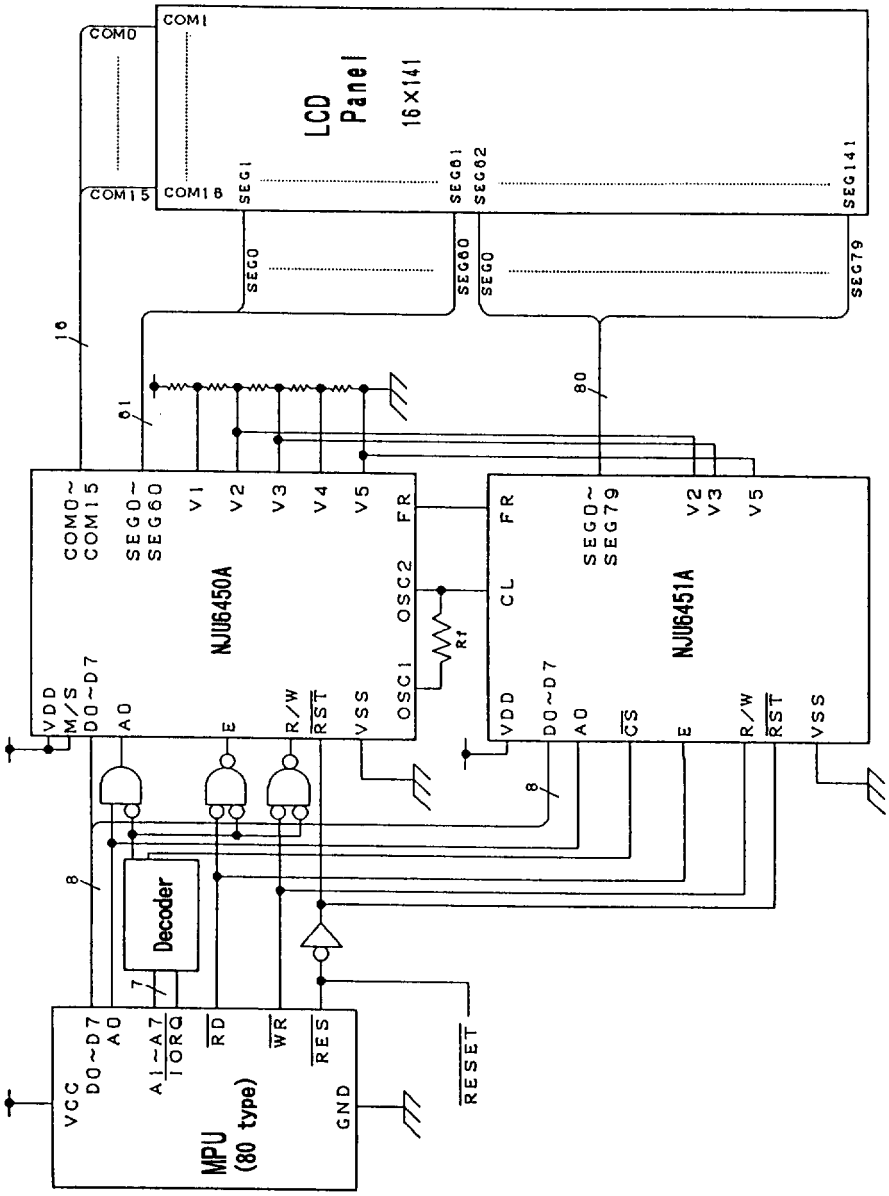
(3) 16 x 141 dots Driving Application Circuits
(Segment Drivers Extension by using NJU6451A)