AG-240128A • 240×128 dots 1/128 Duty

FEATURE

1. Construction : STN/FSTN LCD, Bezel, Heat Seal, Zebra and PCB.
2. Optional LED or EL back-light.
3. Built-in Controller / Pure Driver.
4. 5V single power input. Built-in DC/DC converter for LCD driving.
5. Normal / Extended temperature type.

POWER SUPPLY

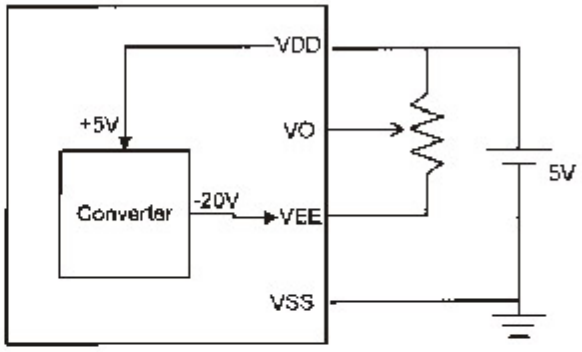

ELECTRICAL CHARACTERISTICS

Item	Symbol	Condition	Typ.Value	Unit.
LCD Driving Voltage	VDD-VO	25℃	18.9	V
Supply Current (Controller)	IDD	VDD=5.0V	25	mA
Supply Current (Driver)	IDD	VDD=5.0V	15	mA

BUILT-IN CONTROLLER

1	2	3	4	5	6	7	8	9	10
VSS	VDD	VO	RS	R/W	E	DB0	DB1	DB2	DB3
11	12	13	14	15	16	17	18	19	20
DB4	DB5	DB6	DB7	/CS	/RST	LEDA	LEDK	NC	VEE

PURE DRIVER

1	2	3	4	5	6	7	8	9	10
FLM	CP	LP	M	VDD	VSS	VEE	DO	D1	D2
11	12	13	14	15					
D3	VO	/DISPOFF	LEDA	LEDK					

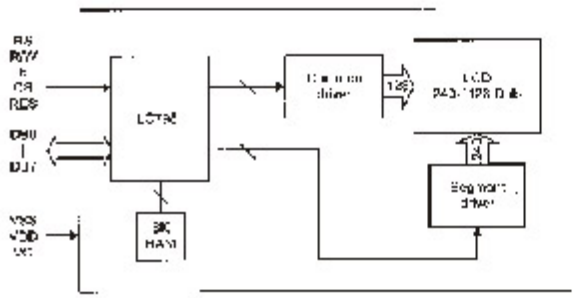

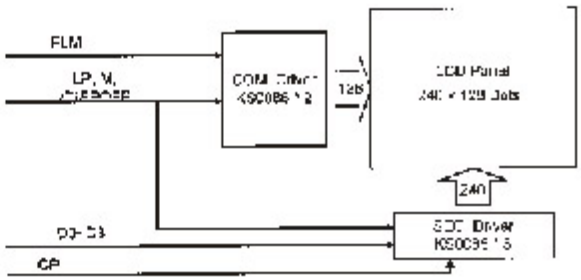

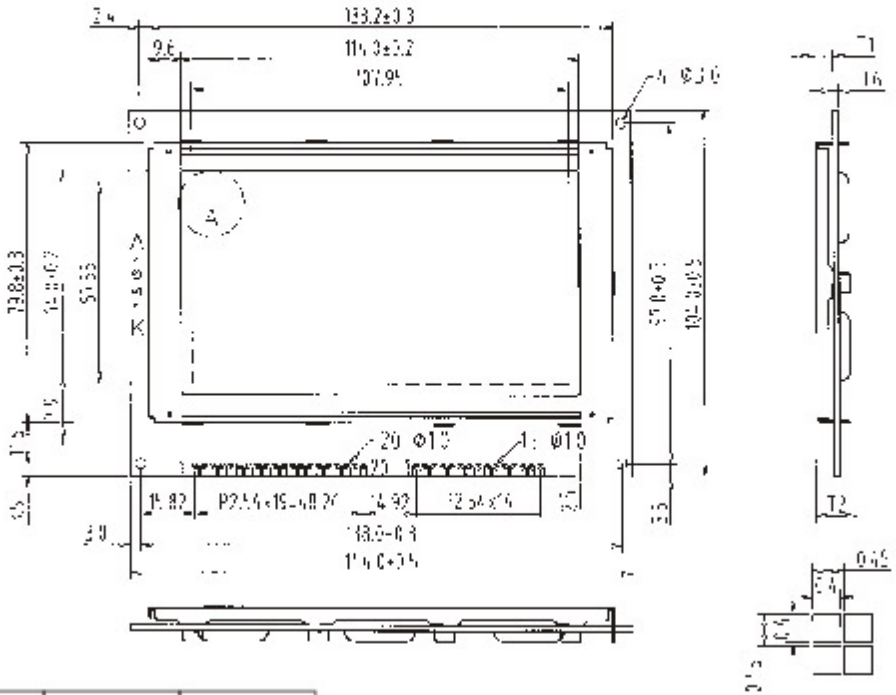

THICKNESS:

VERSION	T1	T2
EL & NO BACKLIGHT	5.5±0.3	12.0Max.
LED BACKLIGHT	9.0±0.3	15.0Max.