5mm SQUARE THIN TYPE ISOLATOR

MODEL ESI-5BB [ ] 0897 M 02 - T

(1) (2) (3) (4) (5) (6)

(1) Series ESI-5BB ; 2.0mm Height for 800MHz Band
(2) Rotating Direction (R or L)
(3) Center Frequency
(4) M ; MHz
(5) Control No.
(6) T ; Taping
Blank;Bulk

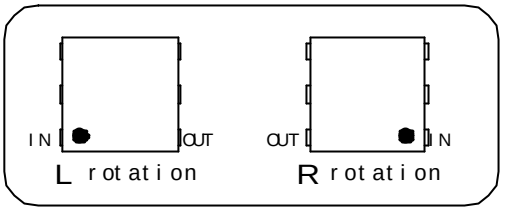

Specification

Frequency (MHz)	Ins. Loss Max. (dB)	Isolation Min. (dB)	V.S.W.R. Max.	Attenuation at 2f Min. (dB)	Attenuation at 3f Min. (dB)	Handling Power Max. (W)	Reflection Power Max. (W)
880-915	0.70	12	1.6	15	15	5.0	1.0

Operating Temperature(deg.C) ; -35 to +85
Impedance ; 50 ohms Typ.

Applicable to Pb free reflow soldering

Shape & Size

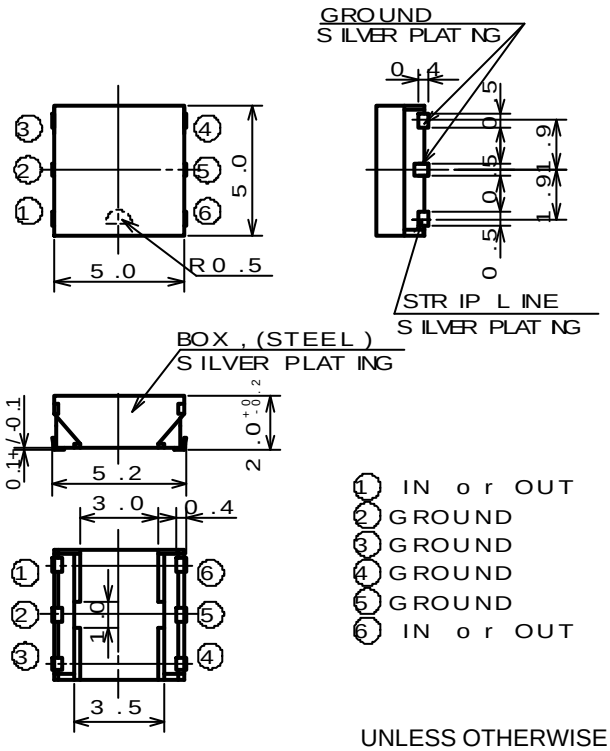

1 IN or OUT
2 GROUND
3 GROUND
4 GROUND
5 GROUND
6 IN or OUT

UNLESS OTHERWISE SPECIFIED
ALL DIMENSIONS ARE IN mm
TOLERANCES ARE +/-0.2mm

Weight ; 0.2g

TAE974

Hitachi Metals, Ltd. Tottori Works