LOW PROFILE QUAD FLAT PACKAGE
208 PIN PLASTIC

FPT-208P-M06

208-pin plastic LQFP		
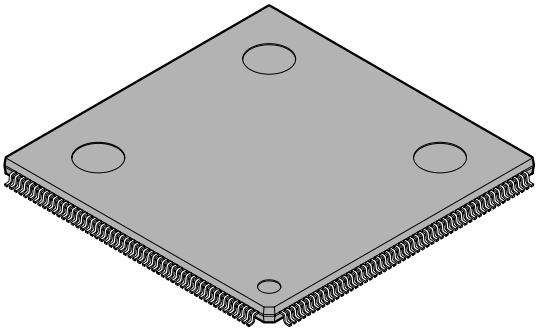	Lead pitch	0.50 mm
	Package width × package length	28.0 × 28.0 mm
	Lead shape	Gullwing
	Sealing method	Plastic mold
	Mounting height	1.70 mm MAX
	Weight	2.55g
(FPT-208P-M06)	Code (Reference)	P-LFQFP208-28×28-0.50

208-pin plastic LQFP
(FPT-208P-M06)

Note 1) * : These dimensions do not include resin protrusion.
Note 2) Pins width and pins thickness include plating thickness.
Note 3) Pins width do not include tie bar cutting remainder.

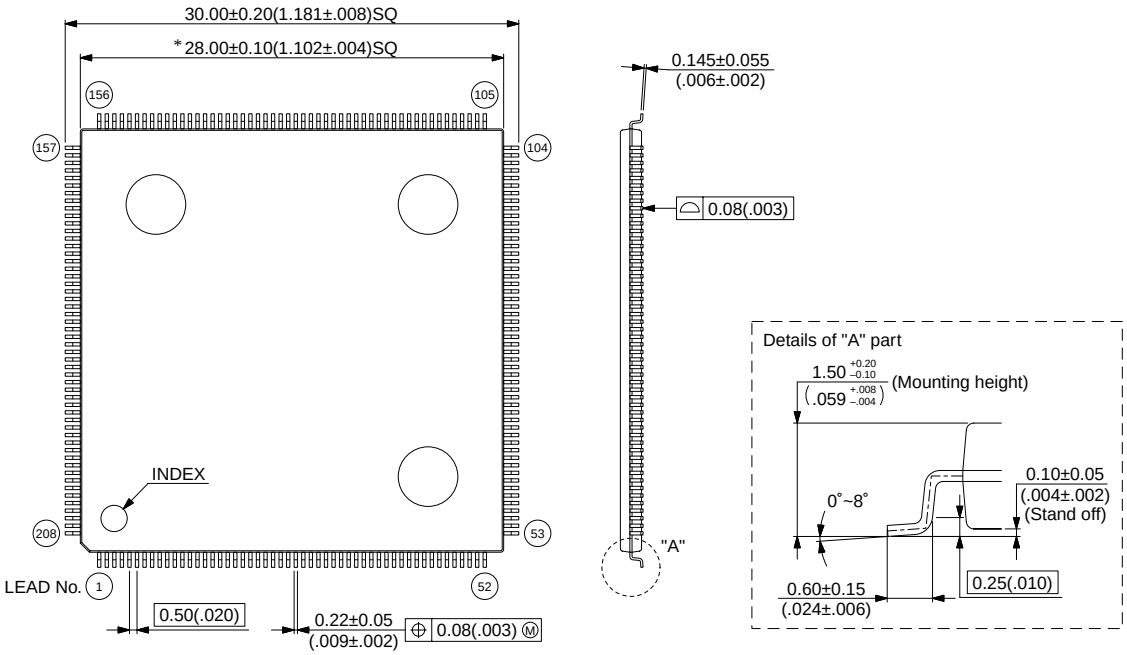

Dimensions in mm (inches).
Note: The values in parentheses are reference values.

© 2003 FUJITSU LIMITED F208027S-c-3-3

The contents of this document are subject to change without notice.
Customers are advised to consult with FUJITSU sales representatives before ordering.
FUJITSU is unable to assume responsibility for infringement of any patent rights or other rights of third parties arising from the use of the information or package dimensions in this document.