Technical Data Sheet

3474/B1DB-AFHA/X/MS

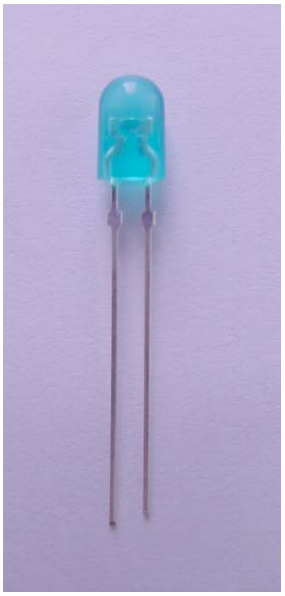

Features

- High luminous intensity output
- Oval Shape
- Well defined spatial radiation
- Wide viewing angle ($2\theta_{1/2}$) : 100° / 50°
- ESD-withstand voltage: up to 4KV
- The product itself will remain within RoHS compliant version
- UV resistant epoxy

Descriptions

- This precision optical performance oval LED is specifically designed for passenger information signs
- This lamp has matched radiation patterns with red and green mixing color applications
- Superior performance in outdoor environment

Applications

- Single or dual color graphic signs
- Message boards
- Variable message signs (VMS)
- Commercial outdoor advertising

Device Selection Guide

LED Part No.	Chip Material	Emitted Color	Lens Color	Stopper
3474/B1DB-AFHA/MS	InGaN	Super Blue	Blue Diffused	No
3474/B1DB-AFHA/P/MS				Yes

3474/B1DB-AFHA/X/MS

Package Dimensions

Stopper Type

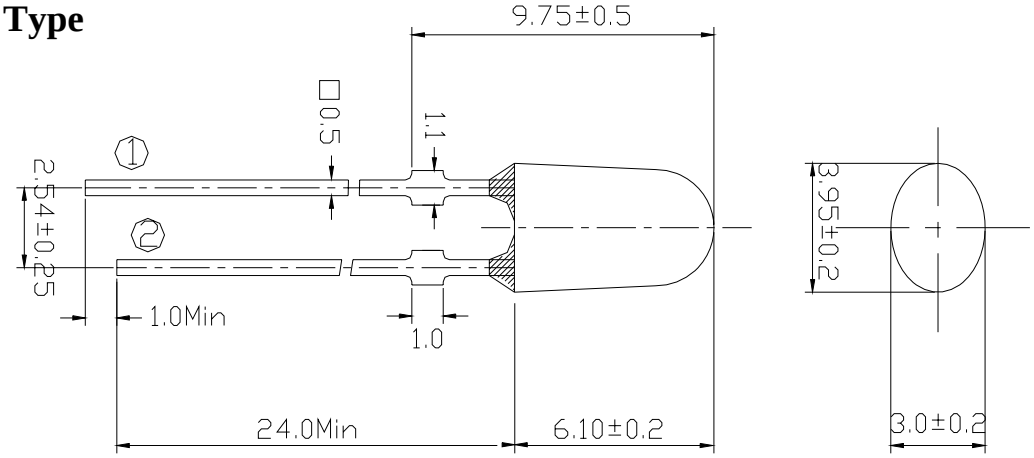

No Stopper Type

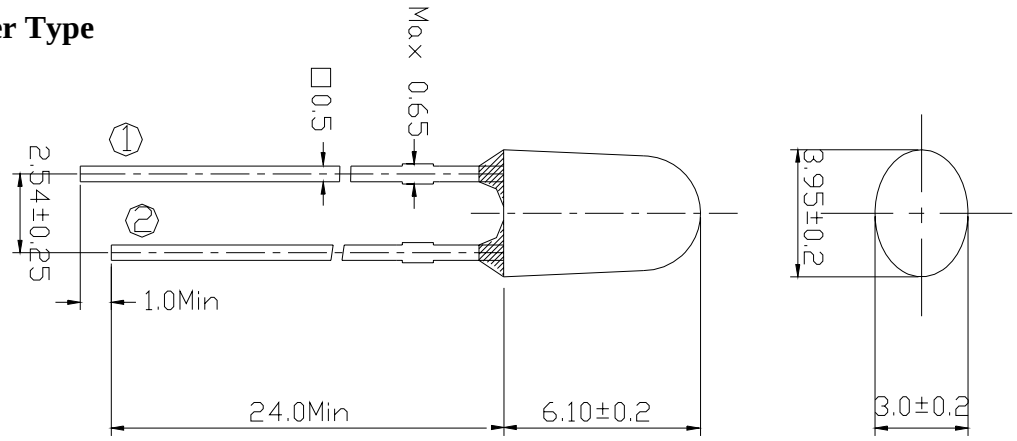

① Anode

② Cathode

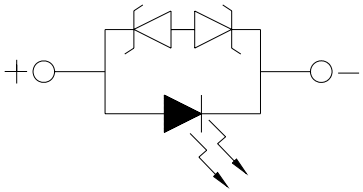

Notes:

- All dimensions are in millimeters, tolerance is 0.25mm except being specified.
- Protruded resin under flange is 1.5mm Max LED.
- Bare copper alloy is exposed at tie-bar portion after cutting.

Absolute Maximum Rating (T_a=25℃)

Parameter	Symbol	Absolute Maximum Rating	Unit
Forward Current	I_F	30	mA
Pulse Forward Current (Duty1/10@ 1KHz)	I_{FP}	100	mA
Operating Temperature	T_{opr}	-40 ~ +85	℃
Storage Temperature	T_{stg}	-40 ~ +100	℃
Electrostatic Discharge	ESD	4K	V
Soldering Temperature	T_{sol}	260 ±5	℃
Power Dissipation	P_d	100	mW
Reverse Voltage	V_R	5	V
Zener Reverse Current	Iz	100	mA

Notes: Soldering time≦5 seconds.

Electro-Optical Characteristics (T_a=25℃)

Parameter	Symbol	Min.	Typ.	Max.	Unit	Condition
Luminous Intensity	I_V	450	565	900	mcd	I_F=20mA
Viewing Angle	$2\theta_{1/2}$	--	X:100Y:50	--	deg	
Peak Wavelength	λ_p	--	468	--	nm	
Dominant Wavelength	λ_d	--	470	--		
Spectrum Half width	$\Delta\lambda$	--	26	--		
Forward Voltage	V_F	--	3.4	3.6	V	
Reverse Current	I_R	--	--	50	μA	V_R=5V
Zener Reverse Voltage	Vz	5.2	--	--	V	Iz=5mA

Rank Combination (I_F=20mA)

Rank	F	G	H
Luminous Intensity	450~565	565~715	715~900

*Measurement Uncertainty of Luminous Intensity: ±15% Unit:mcd

Rank	0	1	2	3
Forward Voltage	2.8~3.0	3.0~3.2	3.2~3.4	3.4~3.6

*Measurement Uncertainty of Forward Voltage: ±0.1V Unit:V

Rank	1	2
Dominant Wavelength	465~470	470~475

*Measurement Uncertainty of Dominant Wavelength ±1.0nm Unit:nm

*The quantity ratio of the ranks is decided by EVERLIGHT.

Typical Electro-Optical Characteristics Curves

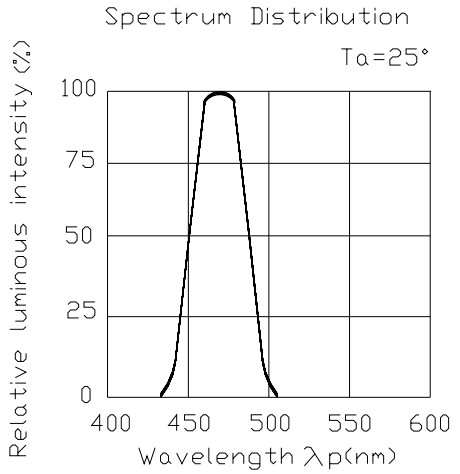

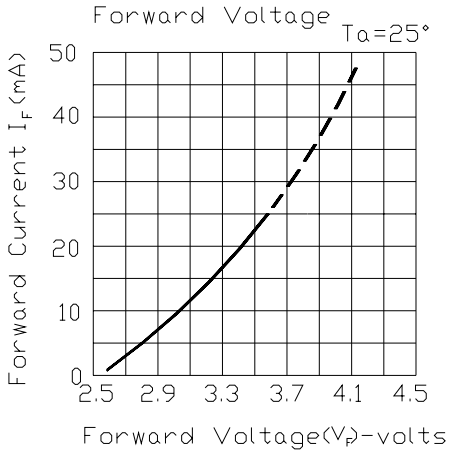

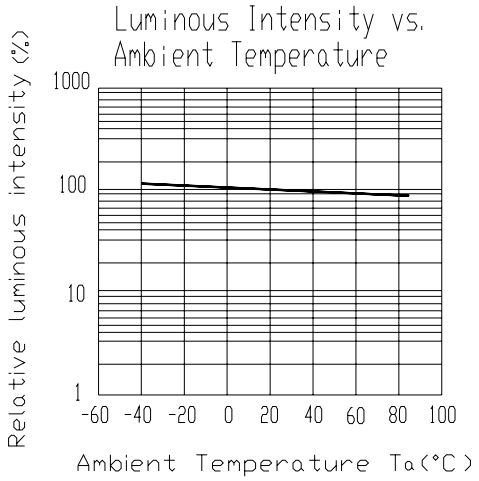

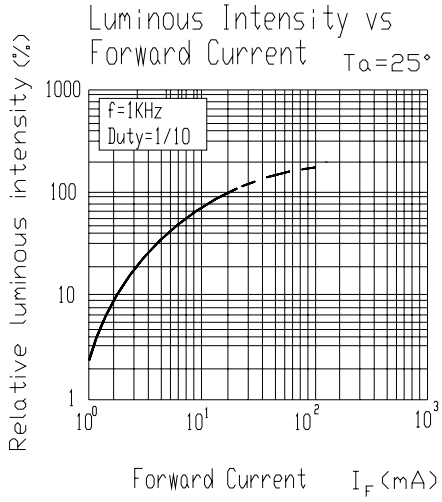

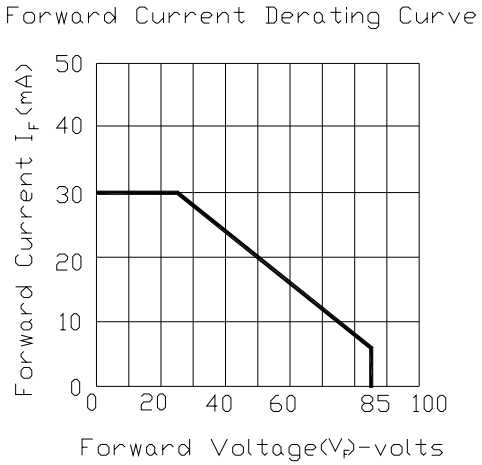

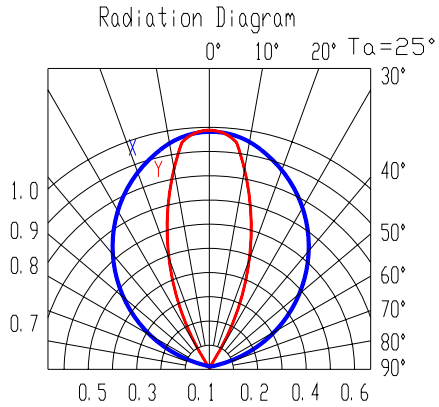

3474/B1DB-AFHA/X/MS

Packing Quantity Specification

1.1000PCS/1Bag，5Bags/1Box

2.10Boxes/1Carton

Label Form Specification

EVERLIGHT

CPN:

P/N:

RoHS

3474/B1DB/AFHA/X/MS

QTY：

CAT:

HUE:

LOT NO：

REF:

MADE IN TAIWAN

CPN: Customer's Production Number

P/N : Production Number

QTY: Packing Quantity

CAT: Ranks of Luminous Intensity and Forward Voltage

HUE: Ranks of Dominant Wavelength

REF: Reference

LOT No: Lot Number

MADE IN TAIWAN: Production Place

Notes

1. Above specification may be changed without notice. EVERLIGHT will reserve authority on Material change for above specification.
2. When using this product, please observe the absolute maximum ratings and the instructions for using outlined in these specification sheets. EVERLIGHT assumes no responsibility for any damage resulting from use of the product which does not comply with the absolute maximum ratings and the instructions included in these specification sheets.
3. These specification sheets include materials protected under copyright of EVERLIGHT corporation. Please don't reproduce or cause anyone to reproduce them without EVERLIGHT'sconsent.
4. Below the zener reference voltage Vz, all the current flows through LED and as the voltage rises to Vz, the zener diode "breakdown." If the voltage tries to rise above Vz current flows through the zener branch to keep the voltage at exactly Vz.
5. When the LED is connected using serial circuit, if either piece of LED is no light up but current can't flow through causing others to light down. In new design, the LED is parallel with zener diode. if either piece of LED is no light up but current can flow through causing others to light up.

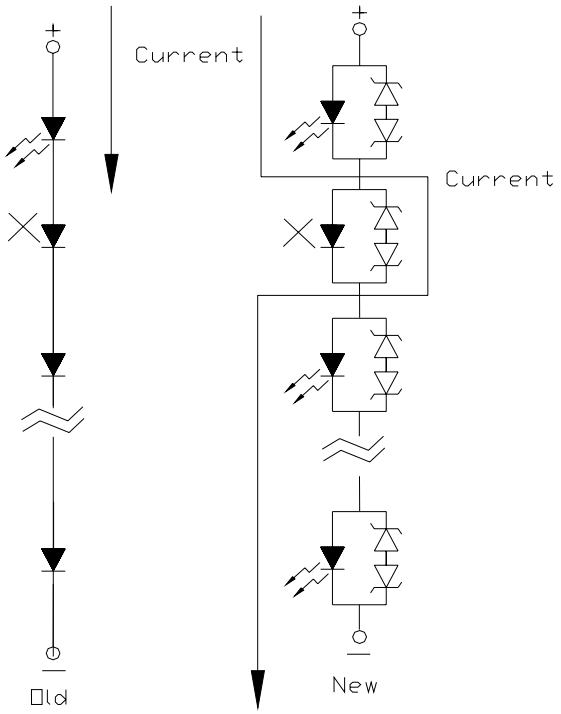

6. Soldering Condition

Careful attention should be paid during soldering. When soldering, leave more then 3mm from solder joint to case, and soldering beyond the base of the tie bar is recommended.

Avoiding applying any stress to the lead frame while the LEDs are at high temperature particularly when soldering.

Recommended soldering conditions:

Hand Soldering		DIP Soldering	
Temp. at tip of iron	400℃ Max. (30W Max.)	Preheat temp.	100℃ Max. (60 sec Max.)
Soldering time	3 sec Max.	Bath temp.	265 Max.
Distance	3mm Min.(From solder joint to case)	Bath time.	5 sec Max.
		Distance	3mm Min.

EVERLIGHT ELECTRONICS CO., LTD.
Office: No 25, Lane 76, Sec 3, Chung Yang Rd,
Tucheng, Taipei 236, Taiwan, R.O.C
Tel: 886-2-2267-2000, 2267-9936
Fax: 886-2267-6244, 2267-6189, 2267-6306
http:\\www.everlight.com