UNCONTROLLED DOCUMENT

PART NUMBER	REV.
CLS-RC11A125191B	B

REV.	E.C.N. NUMBER AND REVISION COMMENTS	DATE
A	E.C.N. #11266.	8.18.05
B	E.C.N. #11148.	12.08.06

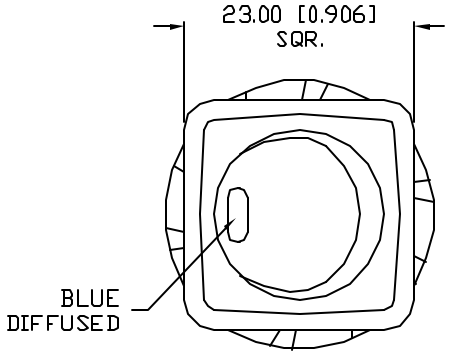

CHARACTERISTICS	
RATING	10A AT 125VAC, 6A AT 250VAC
LED COLOR	BLUE
CIRCUIT OPERATION	SPST
NO. OF PINS	4
SWITCH OPERATION	ON-OFF

PANEL CUTOUT

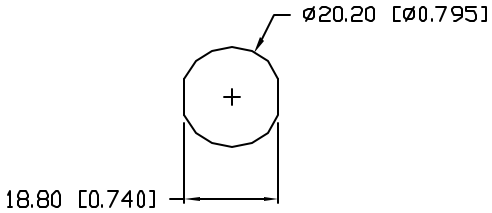

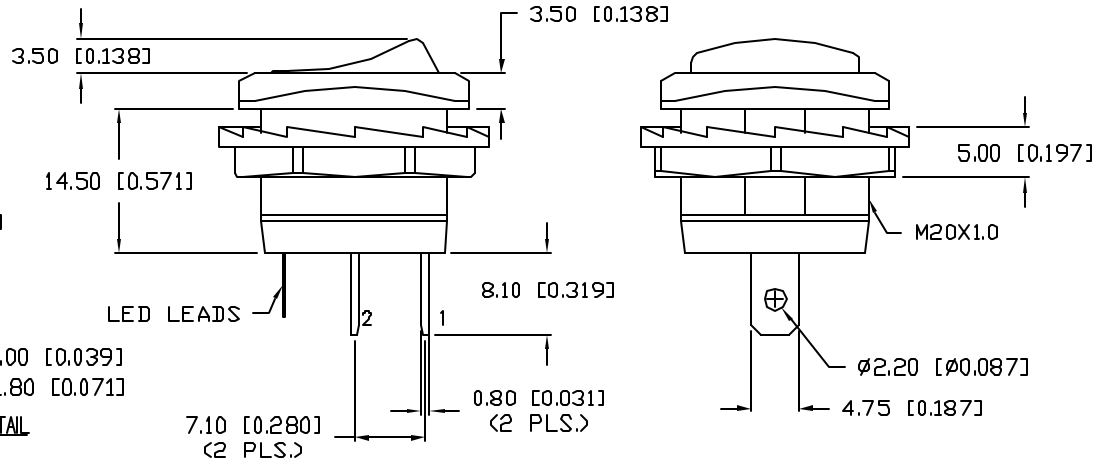

LED LEAD SIDE VIEW DETAIL

INTERNAL CIRCUIT

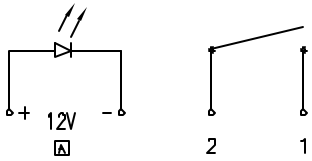

B

Pb

UNCONTROLLED DOCUMENT

*UNLESS OTHERWISE SPECIFIED TOLERANCES PER DECIMAL PRECISION ARE: X=±1 (±0.039), X.X=±0.5 (±0.020), X.XX=±0.25 (±0.010), X.XXX=±0.127 (±0.005). LEAD SIZE=±0.05 (±0.002), LEAD LENGTH=±0.75 (±0.030). MIN= +DECIMAL PRECISION -0.00 MAX.= +0.00 -DECIMAL PRECISION

REV.	PART NUMBER
B	CLS-RC11A125191B

ILLUMINATED ROCKER SWITCH, 10A AT 125VAC RATING, BLUE LED, BLUE DIFFUSED LENS.

CONFIDENTIAL INFORMATION
THE INFORMATION CONTAINED IN THIS DOCUMENT IS THE PROPERTY OF LUMEX INC. EXCEPT AS SPECIFICALLY AUTHORIZED IN WRITING BY LUMEX INC., THE HOLDER OF THIS DOCUMENT SHALL KEEP ALL INFORMATION CONTAINED HEREIN CONFIDENTIAL AND SHALL PROTECT SAME IN WHOLE OR IN PART FROM DISCLOSURE AND DISSEMINATION TO ALL THIRD PARTIES.

RELIABILITY NOTE
OUR MANY YEARS OF EXPERIENCE DATA ACCUMULATION INDICATE THAT SOLDER HEAT IS A MAJOR CAUSE OF EARLY AND FUTURE FAILURE. PLEASE PAY ATTENTION TO YOUR SOLDERING PROCESS.

LUMEX INC.
290 E. HELEN ROAD
PALATINE, IL 60067-6976
PHONE: +1.847.359.2790
US WEB: www.lumex.com
TW WEB: www.lumex.com.tw

DRAWN BY:	CHECKED BY:	APPROVED BY:	DATE: 12.08.06
JC			PAGE: 1 OF 1
			SCALE: N/A