Sheet4U.com

AM1 8-bit SERIES

AM1 (MN101) Series

The AM1 Series of 8-bit microcomputers is the realization of developments in C programming.

Because of the 8-bit architecture, which allows half-byte instruction sets and offers other advantages, assembler ROM code size can be reduced.

They are compact and consume little power, but feature a shortest instruction processing time of 63 ns (5 V).

They can be used in a wide variety of applications where cost performance is a demand.

Features

- **Efficiency of C-based ROM code:** Assembler rate 1 or less
- **High-speed instruction processing:** 63 ns (32 MHz)
- **Linear address space:** 1 MB
- **Identical architecture for 32- and 16-bit microcomputers**
- **Option functions**
  - Hardware task switching (Max. 4 task)
  - 16-bit multiplication
  - ROM collection

■ **Application**

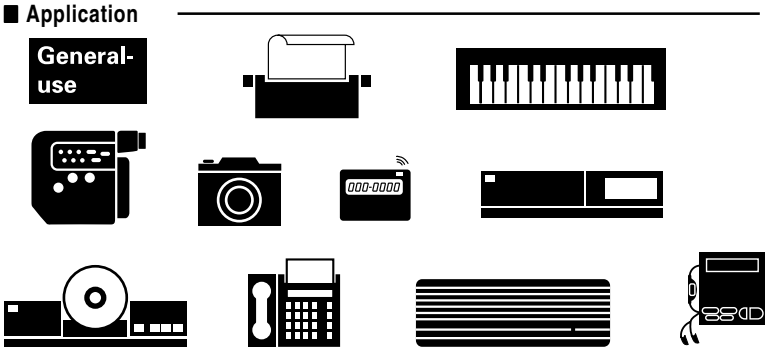

www.DataSheet4U.com

❑ MN101C28A , MN101C28C , MN101C28D , MN101C28F , MN101C28L

Type	MN101C28A	MN101C28C	MN101C28D	MN101C28F	MN101C28L
ROM (×8-bit) External memory can be expanded	32 K	48 K	64 K	96 K	96 K
RAM (×8-bit) External memory can be expanded	1.5 K	2 K	2 K	4 K	10 K
Package (Conventional Package)	[All lead-free] LQFP080-P-1414A, TQFP080-P-1212D, QFP084-P-1818E (TQFP080-P-1212C)			LQFP080-P-1414A *Lead-free	

Minimum Instruction Execution Time

0.10 µs (at 4.5 V to 5.5 V, 20 MHz)
0.238 µs (at 2.6 V to 5.5 V, 8.39 MHz)
0.333 µs (at 2.3 V to 5.5 V, 6 MHz)
1.00 µs (at 2.0 V to 5.5 V, 2 MHz)*
125 µs (at 2.0 V to 5.5 V, 32.768 kHz)*

* The lower limit for operation guarantee for EPROM built-in type is 2.3 V.

Interrupts

• RESET • Watchdog • External 0 • External 1 • External 2 • External 3 • External 4 • Timer 0
• Timer 1 • Timer 2 • Timer 3 • Timer 4 • Timer 5 • Time base • Serial 0 • Serial 1 • Serial 2
• Automatic transfer finish • A/D conversion finish

Timer Counter

Timer counter 0 : 8-bit × 1 (square-wave/8-bit PWM output, event count, generation of remote control carrier)
Clock source ····· 1/1, 1/4 of system clock frequency; 1/1 of OSC oscillation clock frequency; external clock input
Interrupt source ····· coincidence with compare register 0

Timer counter 1 : 8-bit × 1 (square-wave output, event count, synchronous output event)
Clock source ····· 1/16, 1/64 of system clock frequency; 1/1 of XI oscillation clock frequency; external clock input
Interrupt source ····· coincidence with compare register 1

Timer counter 0, 1 can be cascade-connected.

Timer counter 2 : 8-bit × 1 (square-wave/8-bit PWM output, event count, synchronous output event)
Clock source ····· 1/1, 1/4 of system clock frequency; 1/1 of XI oscillation clock frequency; external clock input
Interrupt source ····· coincidence with compare register 2

Timer counter 3 : 8-bit × 1
(square-wave output, event count, generation of remote control carrier, serial 0 baud rate timer)
Clock source ····· 1/4, 1/16 of system clock frequency; 1/1 of OSC oscillation clock frequency; external clock input
Interrupt source ····· coincidence with compare register 3

Timer counter 2, 3 can be cascade-connected.

Timer counter 4 : 16-bit × 1
(square-wave/16-bit PWM output, event count, synchronous output event, input capture)
Clock source ····· 1/4, 1/16 of system clock frequency; 1/1 of OSC oscillation clock frequency; external clock input
Interrupt source ····· coincidence with compare register 4

Time base timer (one-minute count setting, independently operable 8-bit timer counter 5)
Clock source ····· 1/4 of system clock frequency; 1/1, 1/8192 of OSC oscillation clock frequency; 1/1, 1/8192 of XI oscillation clock frequency
Interrupt source ····· coincidence with compare register 5; 1/8192 prescaler overflow

Watchdog timer
Interrupt source ····· 1/65536, 1/262144, 1/1048576 of system clock frequency (ROM option)

www.DataSheet4U.com

www.DataSheet4U.com

Serial Interface	Serial 0 : synchronous type/simple UART (half-duplex) × 1 Clock source ····· 1/2, 1/4, 1/16 of system clock frequency; output of timer counter 3 Serial 1 : synchronous type × 1 Clock source ····· 1/2, 1/8, 1/64 of system clock frequency; output of timer counter 3 Serial 2 : synchronous type/single-master I²C × 1 Clock source ····· 1/4, 1/8, 1/16, 1/32 of system clock frequency; 1/4 of timer counter 0 frequency		
I/O Pins	**I/O**	57	• Common use • Specified pull-up resistor available • Input/output selectable (bit unit)
	Input	13	• Common use • Specified pull-up resistor available
A/D Inputs	10-Bit × 8-ch. (with S/H)		
Special Ports	Buzzer output, remote control carrier signal output, high-current drive port		

Electrical Characteristics

Supply current

Parameter	Symbol	Condition	Limit			Unit
			min	typ	max	
Operating supply current	IDD1	fosc = 20 MHz, VDD = 5 V		25	50	mA
	IDD2	fx = 32.768 kHz, VDD = 3 V		40	120	µA
Supply current at HALT	IDD3	fx = 32.768 kHz, VDD = 3 V, Ta = 25°C		4	8	µA
		fx = 32.768 kHz, VDD = 3 V, Ta = 85°C			20	µA
Supply current at STOP	IDD4	VDD = 5 V, Ta = 25°C			1	µA
		VDD = 5 V, Ta = −40°C to +85°C			30	µA

See the next page for pin assignment and support tool.

www.DataSheet4U.com

www.DataSheet4U.com

Pin Assignment

( ) : Conventional Package

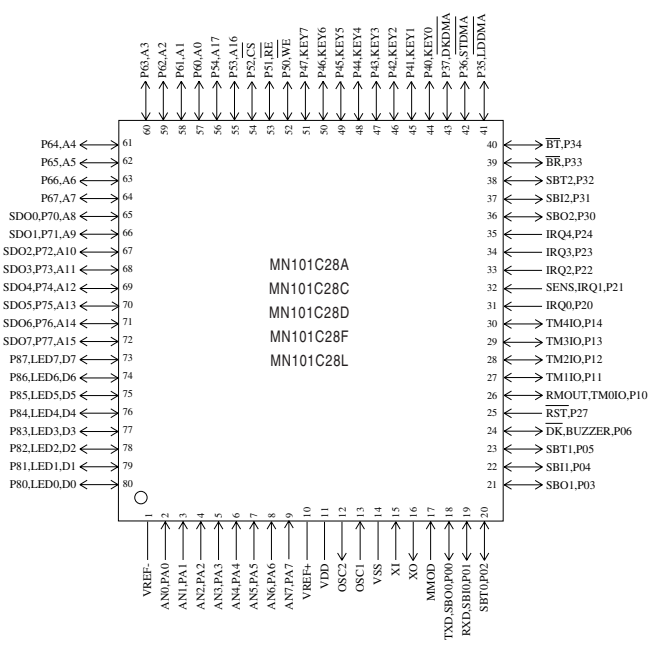

LQFP080-P-1414A *Lead-free

TQFP080-P-1212D *Lead-free [MN101C28A/28C/28D]

(TQFP080-P-1212C)

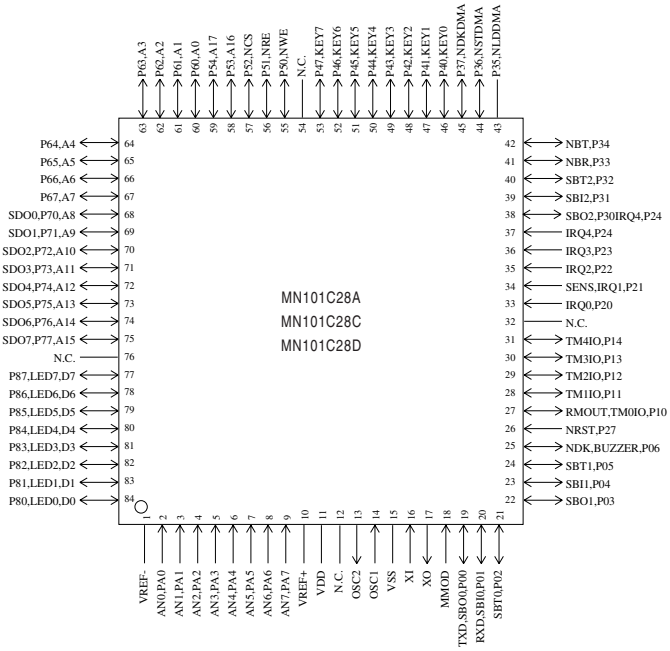

QFP084-P-1818E *Lead-free

Support Tool

In-circuit Emulator

PX-ICE101C/D+PX-PRB101C28-TQFP080-P-1212
PX-ICE101C/D+PX-PRB101C28-QFP084-P-1818E
PX-ICE101C/D+PX-PRB101C28-LQFP080-P-1414A

EPROM Built-in Type

Type	MN101CP28DBF , MN101CP28DAL , MN101CP28DHT , MN101CP28LAL
ROM (× 8-bit)	64 K / 64 K / 64 K / 96 K
RAM (× 8-bit)	2 K / 2 K / 2 K / 10 K
Minimum instruction execution time	0.10 µs (at 4.5 V to 5.5 V, 20 MHz) 0.238 µs (at 2.6 V to 5.5 V, 8.39 MHz) 0.333 µs (at 2.3 V to 5.5 V, 6 MHz)
Package (Conventional Package)	[All lead-free] LQFP080-P-1414A, TQFP080-P-1212D, QFP084-P-1818E (TQFP080-P-1212C)

www.DataSheet4U.com

www.DataSheet4U.com

www.DataSheet4U.com

www.DataSheet4U.com

❑ MN101C309 , MN101C30A

Type	MN101C309	MN101C30A
ROM (×8-bit) External memory can be expanded	24 K	32 K
RAM (×8-bit) External memory can be expanded	1 K	1.5 K
Package	LQFP064-P-1414 *Lead-fre	
Minimum Instruction Execution Time	0.10 µs (at 4.5 V to 5.5 V, 20 MHz) 0.238 µs (at 2.7 V to 5.5 V, 8.39 MHz) 1.00 µs (at 2.0 V to 5.5 V, 2 MHz)* 125 µs (at 2.0 V to 5.5 V, 32.768 kHz)* * The lower limit for operation guarantee for EPROM built-in type is 2.7 V.	
Interrupts	• RESET • Watchdog • External 0 • External 1 • External 2 • External 3 • External 4 • Timer 0 • Timer 1 • Timer 2 • Timer 3 • Timer 4 • Timer 5 • Time Base • Serial 0 • Serial 1 • Automatic transfer finish • A/D conversion finish	
Timer Counter	Timer counter 0 : 8-bit × 1 (square-wave/8-bit PWM output, event count, generation of remote control carrier) Clock source ····· 1/1, 1/4 of system clock frequency; 1/1 of OSC oscillation clock frequency; external clock input Interrupt source ····· coincidence with compare register 0 Timer counter 1 : 8-bit × 1 (square-wave output, event count, synchronous output event) Clock source ····· 1/16, 1/64 of system clock frequency; 1/1 of XI oscillation clock frequency; external clock input Interrupt source ····· coincidence with compare register 1 Timer counter 0, 1 can be cascade-connected. Timer counter 2 : 8-bit × 1 (square-wave/8-bit PWM output, event count, synchronous output event) Clock source ····· 1/1, 1/4 of system clock frequency; 1/1 of XI oscillation clock frequency; external clock input Interrupt source ····· coincidence with compare register 2 Timer counter 3 : 8-bit × 1 (square-wave output, event count, generation of remote control carrier, serial 0 baud rate timer) Clock source ····· 1/4, 1/16 of system clock frequency; 1/1 of OSC oscillation clock frequency; external clock input Interrupt source ····· coincidence with compare register 3 Timer counter 2, 3 can be cascade-connected. Timer counter 4 : 16-bit × 1 (square-wave/16-bit PWM output, event count, synchronous output event, input capture) Clock source ····· 1/4, 1/16 of system clock frequency; 1/1 of OSC oscillation clock frequency; external clock input Interrupt source ····· coincidence with compare register 4 Time base timer (one-minute count setting, independently operable 8-bit timer counter 5) Clock source ····· 1/4 of system clock frequency; 1/1, 1/8192 of OSC oscillation clock frequency; 1/1, 1/8192 of XI oscillation clock frequency Interrupt source ····· coincidence with compare register 5; 1/8192 prescaler overflow Watchdog timer Interrupt source ····· 1/65536, 1/262144, 1/1048576 of system clock frequency (ROM option)	

www.DataSheet4U.com

www.DataSheet4U.com

Serial Interface	Serial 0 : synchronous type/simple UART (half-duplex) × 1 Clock source ····· 1/2, 1/4, 1/16 of system clock frequency; 1/2 of timer counter 3 frequency Serial 1 : synchronous type × 1 Clock source ····· 1/2, 1/8, 1/64 of system clock frequency; output of timer counter 3		
I/O Pins	**I/O**	41	• Common use • Specified pull-up resistor available • Input/output selectable (bit unit)
	Input	13	• Common use • Specified pull-up resistor available
A/D Inputs	10-bit × 8-ch. (with S/H)		
Special Ports	Buzzer output, remote control carrier signal output, high-current drive port		

Electrical Characteristics

Supply current

Parameter	Symbol	Condition	Limit			Unit
			min	typ	max	
Operating supply current	IDD1	fosc = 20 MHz, VDD = 5 V		25	60	mA
	IDD2	fx = 32.768 kHz, VDD = 3 V		30	100	µA
Supply current at HALT	IDD3	fx = 32.768 kHz, VDD = 3 V, Ta = 25°C		4	8	µA
		fx = 32.768 kHz, VDD = 3 V, Ta = 85°C			18	µA
Supply current at STOP	IDD4	VDD = 5 V, Ta = 25°C			2	µA
		VDD = 5 V, Ta = −40°C to +85°C			20	µA

See the next page for pin assignment and support tool.

www.DataSheet4U.com

www.DataSheet4U.com

Pin Assignment

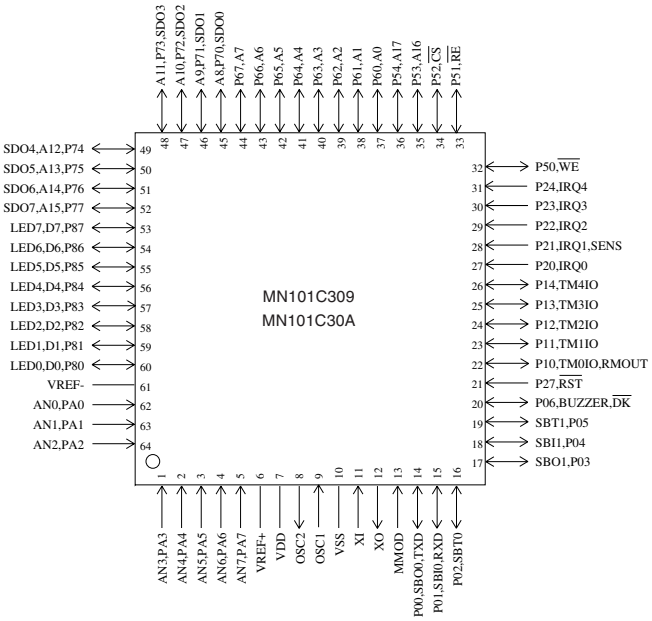

LQFP064-P-1414 *Lead-free

Support Tool

In-circuit Emulator	PX-ICE101C/D+PX-PRB101C30-LQFP064-P-1414	
EPROM Built-in Type	Type	MN101CP30ABL
	ROM (× 8-bit)	32 K
	RAM (× 8-bit)	1.5 K
	Minimum instruction execution time	0.10 µs (at 4.5 V to 5.5 V, 20 MHz) 0.238µs (at 2.7 V to 5.5 V, 8 MHz)
	Package	LQFP064-P-1414 *Lead-free

www.DataSheet4U.com

www.DataSheet4U.com

www.DataSheet4U.com

www.DataSheet4U.com

❑ MN101C425 , MN101C427

Type			MN101C425	MN101C427
ROM (×8-bit)			8 K	16 K
RAM (×8-bit)			0.25 K	0.5 K
Package (Conventional Package)			SDIP042-P-0600C *Lead-free, TQFP048-P-0707B *Lead-free , QFP044-P-1010F *Lead-free (SDIP042-P-0600)	
Minimum Instruction Execution Time			0.10 µs (at 4.5 V to 5.5 V, 20 MHz) 0.238 µs (at 2.7 V to 5.5 V, 8.39 MHz) 0.477 µs (at 2.0 V to 5.5 V, 4.19 MHz)* 125 µs (at 2.0 V to 5.5 V, 32.768 kHz)* * The lower limit for operation guarantee for EPROM built-in type is 2.7 V.	
Interrupts			• RESET • Watchdog • External 0 • External 1 • External 2 • External 3 (only 48-pin package) • Timer 2 • Timer 3 • Timer 4 • Timer 5 • Time base • Serial 0 • A/D conversion finish	
Timer Counter			Timer counter 2 : 8-bit × 1 (square-wave/8-bit PWM output, event count, synchronous output event) Clock source ····· 1/1, 1/4 of system clock frequency; 1/1 of XI oscillation clock frequency (only 48-pin package); external clock input Interrupt source ····· coincidence with compare register 2 Timer counter 3 : 8-bit × 1 (square-wave output, event count, generation of remote control carrier, serial 0 baud rate timer) Clock source ····· 1/4, 1/16 of system clock frequency; 1/1 of OSC oscillation clock frequency; external clock input Interrupt source ····· coincidence with compare register 3 Timer counter 2, 3 can be cascade-connected. Timer counter 4 : 16-bit × 1 (square-wave/16-bit PWM output, event count, synchronous output event, input capture) Clock source ····· 1/4, 1/16 of system clock frequency; 1/1 of OSC oscillation clock frequency; external clock input Interrupt source ····· coincidence with compare register 4 Time base timer (one-minute count setting, independently operable 8-bit timer counter 5) Clock source ····· 1/4 of system clock frequency; 1/1, 1/8192 of OSC oscillation clock frequency; 1/1, 1/8192 of XI oscillation clock frequency (only 48-pin package) Interrupt source ····· coincidence with compare register 5; 1/8192 prescaler overflow Watchdog timer Interrupt source ····· 1/65536, 1/262144, 1/1048576 of system clock frequency (ROM option)	
Serial Interface			Serial 0 : synchronous type/simple UART (half-duplex) × 1 Clock source ····· 1/2, 1/4, 1/16 of system clock frequency; output of timer counter 3	
I/O Pins	I/O	27	• Common use: 16 • Specified pull-up resistor available • Input/output selectable (bit unit): 26 (for 44-pin), 25 (for 42-pin)	
	Input	12	• Common use • Specified pull-up resistor available	
A/D Inputs			10-bit × 8-ch. (with S/H)	
Special Ports			Buzzer output, remote control carrier signal output, high-current drive port	

www.DataSheet4U.com

www.DataSheet4U.com

Electrical Characteristics

Supply current

Parameter	Symbol	Condition	Limit			Unit
			min	typ	max	
Operating supply current	IDD1	fosc = 20 MHz, VDD = 5 V		15	40	mA
	IDD2	fosc = 8.39 MHz, VDD = 5 V		6	18	mA
	IDD3	fx = 32.768 kHz, VDD = 3 V			100	µA
Supply current at HALT	IDD4	fx = 32.768 kHz, VDD = 3 V, Ta = 25°C			8	µA
	IDD5	fx = 32.768 kHz, VDD = 3 V, Ta = −40°C to +85°C			18	µA
Supply current at STOP	IDD6	VDD = 5 V, Ta = 25°C			2	µA
		VDD = 5 V, Ta = −40°C to +85°C			20	µA

Pin Assignment

( ) : Conventional Package

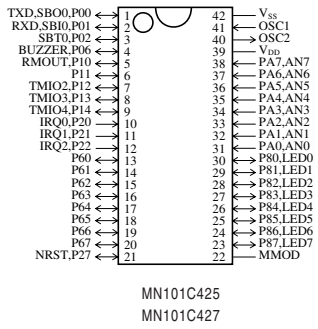

SDIP042-P-0600C *Lead-free

(SDIP042-P-0600)

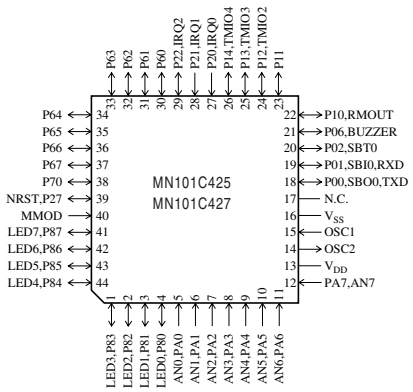

QFP044-P-1010F *Lead-free

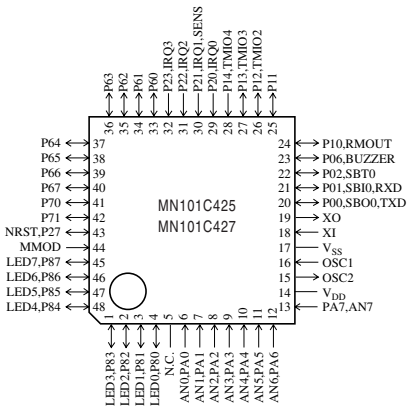

TQFP048-P-0707B *Lead-free

Support Tool

In-circuit Emulator

PX-ICE101C/D+PX-PRB101C42-QFP044-P-1010
PX-ICE101C/D+PX-PRB101C42-TQFP048-P-0707B
PX-ICE101C/D+PX-PRB101C42-SDIP042-P-0600

EPROM Built-in Type

Type	MN101CP427DP , MN101CP427BF , MN101CP427HT
ROM (× 8-bit)	16 K
RAM (× 8-bit)	0.5 K
Minimum instruction execution time	0.10 µs (at 4.5 V to 5.5 V, 20 MHz) 0.238 µs (at 2.7 V to 5.5 V, 8.39 MHz)
Package (Conventional Package)	[All lead-free] SDIP042-P-0600C, TQFP048-P-0707B, QFP044-P-1010F (SDIP042-P-0600)

www.DataSheet4U.com

www.DataSheet4U.com

❑ MN101C457

Type			MN101C457
ROM (×8-bit)			16 K
RAM (×8-bit)			0.5 K
Package			QFP044-P-1010F *Lead-free
Minimum Instruction Execution Time			0.10 µs (at 4.5 V to 5.5 V, 20 MHz) 0.238 µs (at 2.7 V to 5.5 V, 8.39 MHz) 0.477 µs (at 2.0 V to 5.5 V, 4.19 MHz)
Interrupts			• RESET • Watchdog • External 0 • External 1 • External 2 • Timer 2 • Timer 3 • Timer 4 • Timer 5 • Time base • Serial 0 • A/D conversion finish
Timer Counter			Timer counter 2 : 8-bit × 1 (square-wave/8-bit PWM output, event count, synchronous output event) Clock source ····· 1/1, 1/4 of system clock frequency; external clock input Interrupt source ····· coincidence with compare register 2 Timer counter 3 : 8-bit × 1 (square-wave output, event count, generation of remote control carrier, serial 0 baud rate timer) Clock source ····· 1/4, 1/16 of system clock frequency; 1/1 of OSC oscillation clock frequency; external clock input Interrupt source ····· coincidence with compare register 3 Timer counter 2, 3 can be cascade-connected. Timer counter 4 : 16-bit × 1 (square-wave/16-bit PWM output, event count, synchronous output event, input capture) Clock source ····· 1/4, 1/16 of system clock frequency; 1/1 of OSC oscillation clock frequency; external clock input Interrupt source ····· coincidence with compare register 4 Time base timer (one-minute count setting, independently operable 8-bit timer counter 5) Clock source ····· 1/4 of system clock frequency; 1/1, 1/8192 of OSC oscillation clock frequency Interrupt source ····· coincidence with compare register 5; 1/8192 prescaler overflow Watchdog timer Interrupt source ····· 1/65536, 1/262144, 1/1048576 of system clock frequency (ROM option)
Serial Interface			Serial 0 : synchronous type/simple UART (half-duplex) × 1 Clock source ····· 1/2, 1/4, 1/16 of system clock frequency; pulse output of timer counter 3
I/O Pins	**I/O**	26	• Common use: 16 • Specified pull-up resistor available • Input/output selectable (bit unit): 26
	Input	11	• Common use • Specified pull-up resistor available
A/D Inputs			10-bit × 8-ch. (with S/H)
Special Ports			Buzzer output, remote control carrier signal output, high-current drive port

www.DataSheet4U.com

www.DataSheet4U.com

Electrical Characteristics

Supply current

Parameter	Symbol	Condition	Limit			Unit
			min	typ	max	
Operating supply current	IDD1	fosc = 20 MHz, VDD = 5 V		15	40	mA
	IDD2	fosc = 8.39 MHz, VDD = 5 V		6	18	mA
Supply current at STOP	IDD3	VDD = 5 V, Ta = 25°C			2	µA
	IDD4	VDD = 5 V, Ta = −40°C to +85°C			20	µA

Pin Assignment

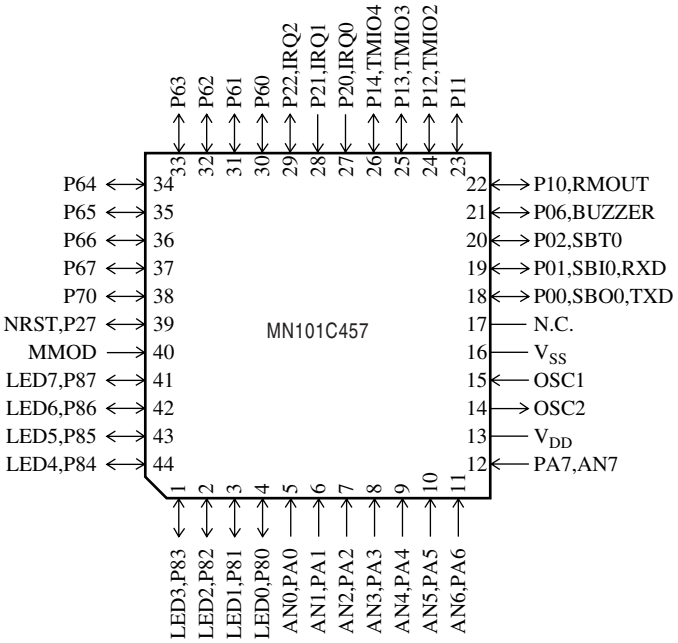

QFP044-P-1010F *Lead-free

Support Tool

In-circuit Emulator	PX-ICE101C/D+PX-PRB101C42-QFP044-P-1010	
EPROM Built-in Type	Type	MN101CP427BF
	ROM (× 8-bit)	16 K
	RAM (× 8-bit)	0.5 K
	Minimum instruction execution time	0.10 µs (at 4.5 V to 5.5 V, 20 MHz)
		0.238 µs (at 2.7 V to 5.5 V, 8.39 MHz)
	Package	QFP044-P-1010F *Lead-free

www.DataSheet4U.com

www.DataSheet4U.com

❑ MN101C539

Type			MN101C539
ROM (×8-bit)			24 K (External memory can not be expanded)
RAM (×8-bit)			0.5 K (External memory can not be expanded)
Package			TQFP048-P-0707B *Lead-free
Minimum Instruction Execution Time			High speed mode: 0.10 µs (at 4.5 V to 5.5 V, 20 MHz) 0.238 µs (at 2.7 V to 5.5 V, 8.39 MHz) 1.00 µs (at 2.0 V to 5.5 V, 4 MHz)* Low speed mode: 61.04 µs (at 2.0 V to 5.5 V, 32.768 kHz)* * The lower limit for operation guarantee for EPROM built-in type is 2.7 V.
Interrupts			• RESET • Watchdog • External 0 • External 1 • External 2 • External 3 • Timer 2 • Timer 3 • Timer 6 • Time Base • Serial 0 (2 systems) • A/D conversion finish • Timer 7 (2 systems)
Timer Counter			Timer counter 2 : 8-bit × 1 (square-wave/8-bit PWM output, event count, synchronous output event, pulse width measurement) Clock source ····· 1/2, 1/4 of system clock frequency; 1/1, 1/4, 1/16, 1/32, 1/64 of OSC oscillation clock frequency; 1/1 of XI oscillation clock frequency; external clock input Interrupt source ····· coincidence with compare register 2 Timer counter 3 : 8-bit × 1 (square-wave output, event count, generation of remote control carrier) Clock source ····· 1/2, 1/8 of system clock frequency; 1/1, 1/4, 1/16, 1/64, 1/128 of OSC oscillation clock frequency; 1/1 of XI oscillation clock frequency; external clock input Interrupt source ····· coincidence with compare register 3 Timer counter 2, 3 can be cascade-connected. Timer counter 6 : 8-bit freerun timer Clock source ····· 1/1 of system clock frequency; 1/1, 1/4096, 1/8192 of OSC oscillation clock frequency; 1/1, 1/4096, 1/8192 of XI oscillation clock frequency Interrupt source ····· coincidence with compare register 6 Timer counter 7 : 16-bit × 1 (square-wave/16-bit PWM output, cycle / duty continuous variable, event count, synchronous output evevt, pulse width measurement, input capture) Clock source ····· 1/1, 1/2, 1/4, 1/16 of system clock frequency; 1/1, 1/2, 1/4, 1/16 of OSC oscillation clock frequency; 1/1, 1/2, 1/4, 1/16 of external clock input frequency Interrupt source ····· coincidence with compare register 7 (2 lines) Time base timer (one-minute count setting) Clock source ····· 1/1 of OSC oscillation clock frequency; 1/1 of XI oscillation clock frequency Interrupt source ····· 1/128, 1/256, 1/512, 1/1024, 1/8192, 1/32768 of clock source frequency Watchdog timer Interrupt source ····· 1/65536, 1/262144, 1/1048576 of system clock frequency
Serial Interface			Serial 0 : synchronous type/UART (full-duplex) × 1 Clock source ····· 1/2, 1/4 of system clock frequency; pulse output of timer counter 2, 3; 1/2, 1/4, 1/16, 1/64 of OSC oscillation clock frequency
I/O Pins	**I/O**	36	• Common use • Specified pull-up resistor available • Input/output selectable (bit unit)
	Input	4	• Common use • Specified pull-up resistor available

www.DataSheet4U.com

www.DataSheet4U.com

A/D Inputs	10-bit × 8-ch. (with S/H)
Special Ports	Buzzer output, remote control carrier signal output, high-current drive port

Electrical Characteristics

Supply current

Parameter	Symbol	Condition	Limit			Unit
			min	typ	max	
Operating supply current	IDD1	fosc = 20 MHz, VDD = 5 V		20	50	mA
	IDD2	fosc = 8.39 MHz, VDD = 5 V		10	20	mA
	IDD3	fx = 32.768 kHz, VDD = 3 V		20	70	µA
Supply current at HALT	IDD4	fx = 32.768 kHz, VDD = 3 V, Ta = 25°C		2	6	µA
	IDD5	fx = 32.768 kHz, VDD = 3 V, Ta = −40°C to +85°C			15	µA
Supply current at STOP	IDD6	VDD = 5 V, Ta = 25°C			2	µA
		VDD = 5 V, Ta = −40°C to +85°C			20	µA

Pin Assignment

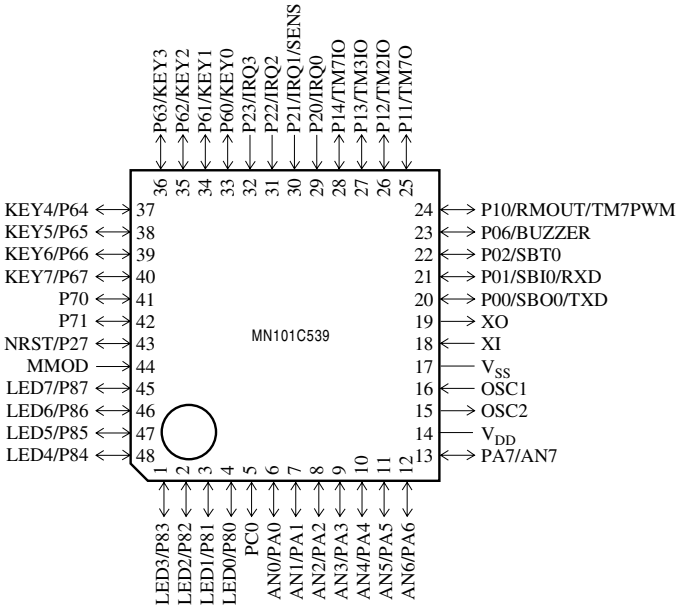

TQFP048-P-0707B *Lead-free

Support Tool

In-circuit Emulator	PX-ICE101C/D+PX-PRB101C53-TQFP048-P-0707B-M	
EPROM Built-in Type	Type	MN101CP539HT
	ROM (× 8-bit)	24 K
	RAM (× 8-bit)	0.5 K
	Minimum instruction execution time	High speed mode: 0.10 µs (at 4.5 V to 5.5 V, 20 MHz) 0.238 µs (at 2.7 V to 5.5 V, 8.39 MHz) 1.00 µs (at 2.7 V to 5.5 V, 4 MHz) Low speed mode: 61.04 µs (at 2.7 V to 5.5 V, 32.768 kHz)
	Package	TQFP048-P-0707B *Lead-free

www.DataSheet4U.com

www.DataSheet4U.com

❑ MN101C61D, MN101C61G

Type	MN101C61D	MN101C61G
ROM (×8-bit)	64 K	128 K
RAM (×8-bit)	3 K	12 K
Package	TQFP080-P-1212D *Lead-free	

Minimum Instruction Execution Time

Standard: 0.1 µs (at 2.5 V to 3.6 V, 20 MHz)
0.2 µs (at 2.1 V to 3.6 V, 10 MHz)
0.5 µs (at 1.8 V to 3.6 V, 4 MHz)*
125 µs (at 1.8 V to 3.6 V, 32 kHz)*

Double speed: 0.1 µs (at 2.5 V to 3.6 V, 10 MHz)
0.2 µs (at 2.1 V to 3.6 V, 5 MHz)
0.5 µs (at 1.8 V to 3.6 V, 2 MHz)*
62.5 µs (at 1.8 V to 3.6 V, 32 kHz)*

* The operation guarantee range for flash memory built-in type is 2.2V to 3.0 V or 2.7V to 3.6 V.

Interrupts

• RESET • Watchdog • External 0 • External 1 • External 2 • External 3 • External 4 • External 5
• Timer 0 • Timer 1 • Timer 2 • Timer 3 • Timer 4 • Timer 5 • Timer 6 • Time base
• Serial 0 reception • Serial 0 transmission • Serial 1 reception • Serial 1 transmission • Serial 2 • Serial 3
• Automatic transfer finish • A/D conversion finish • Timer 7 (2 systems) • Key interrupts (8 lines)

Timer Counter

Timer counter 0 : 8-bit × 1
(square-wave/8-bit PWM output, event count, generation of remote control carrier, pulse width measurement)
Clock source ····· 1/2, 1/4 of system clock frequency; 1/1, 1/4, 1/16, 1/32, 1/64 of OSC oscillation clock frequency; 1/1 of XI oscillation clock frequency; external clock input
Interrupt source ····· coincidence with compare register 0

Timer counter 1 : 8-bit × 1 (square-wave output, event count, synchronous output event)
Clock source ····· 1/2, 1/8 of system clock frequency; 1/1, 1/4, 1/16, 1/64, 1/128 of OSC oscillation clock frequency; 1/1 of XI oscillation clock frequency; external clock input
Interrupt source ····· coincidence with compare register 1

Timer counter 0, 1 can be cascade-connected.

Timer counter 2 : 8-bit × 1
(square-wave/8-bit PWM output, event count, synchronous output event, pulse width measurement)
Clock source ····· 1/2, 1/4 of system clock frequency; 1/1, 1/4, 1/16, 1/32, 1/64 of OSC oscillation clock frequency; 1/1 of XI oscillation clock frequency; external clock input
Interrupt source ····· coincidence with compare register 2

Timer counter 3 : 8-bit × 1 (square-wave output, event count, generation of remote control carrier)
Clock source ····· 1/2, 1/8 of system clock frequency; 1/1, 1/4, 1/16, 1/64, 1/128 of OSC oscillation clock frequency; 1/1 of XI oscillation clock frequency; external clock input
Interrupt source ····· coincidence with compare register 3

Timer counter 2, 3 can be cascade-connected.

Timer counter 4 : 8-bit × 1
(square-wave/8-bit PWM output, event count, pulse width measurement, serial 1 baud rate timer)
Clock source ····· 1/2, 1/4 of system clock frequency; 1/1, 1/4, 1/16, 1/32, 1/64 of OSC oscillation clock frequency; 1/1 of XI oscillation clock frequency; 1/1 of external clock input frequency
Interrupt source ····· coincidence with compare register 4

Timer counter 5 : 8-bit × 1
(square-wave/8-bit PWM output, event count, pulse width measurement, serial 0 baud rate timer)
Clock source ····· 1/2, 1/4 of system clock frequency; 1/1, 1/4, 1/16, 1/32, 1/64 of OSC oscillation clock frequency; 1/1 of XI oscillation clock frequency; 1/1 of external clock input frequency
Interrupt source ····· coincidence with compare register 5

www.DataSheet4U.com

www.DataSheet4U.com

Timer Counter (Continue)

Timer counter 6 : 8-bit freerun timer
- Clock source ····· 1/1 of system clock frequency; 1/1, 1/4096, 1/8192 of OSC oscillation clock frequency; 1/1, 1/4096, 1/8192 of XI oscillation clock frequency
- Interrupt source ····· coincidence with compare register 6

Timer counter 7 : 16-bit × 1
(square-wave/16-bit PWM output, cycle / duty continuous variable, event count, synchronous output evevt, pulse width measurement, input capture)
- Clock source ····· 1/1, 1/2, 1/4, 1/16 of system clock frequency; 1/1, 1/2, 1/4, 1/16 of OSC oscillation clock frequency; 1/1, 1/2, 1/4, 1/16 of external clock input frequency
- Interrupt source ····· coincidence with compare register 7 (2 lines)

Time base timer (one-minute count setting)
- Clock source ····· 1/1 of OSC oscillation clock frequency; 1/1 of XI oscillation clock frequency
- Interrupt source ····· 1/128, 1/256, 1/512, 1/1024, 1/8192, 1/32768 of clock source frequency

Watchdog timer
- Interrupt source ····· 1/65536, 1/262144, 1/1048576 of system clock frequency

DMA Controller (Automatic Data Transfer)

Max. Transfer cycles : 255
Starting factor : external request, various types of interrupt, software
Transfer mode : 1-byte transfer, word transfer, burst transfer

Serial Interface

Serial 0 : synchronous type / UART (full-duplex) × 1
- Clock source ····· 1/2, 1/4 of system clock frequency; pulse output of timer counter 5; 1/2, 1/4, 1/16, 1/64 of OSC oscillation clock frequency

Serial 1 : synchronous type / UART (full-duplex) × 1
- Clock source ····· 1/2, 1/4 of system clock frequency; pulse output of timer counter 4; 1/2, 1/4, 1/16, 1/64 of OSC oscillation clock frequency

Serial 2 : synchronous type × 1
- Clock source ····· 1/2, 1/4 of system clock frequency; pulse output of timer counter 3; 1/2, 1/4, 1/16, 1/32 of OSC oscillation clock frequency

Serial 3 : synchronous type/single-master I^2C × 1
- Clock source ····· 1/2, 1/4 of system clock frequency; pulse output of timer counter 3; 1/2, 1/4, 1/16, 1/32 of OSC oscillation clock frequency

I/O Pins	**I/O**	62	• Common use • Specified pull-up resistor available • Input/output selectable (bit unit)
	Input	6	• Common use • Specified pull-up resistor available

A/D Inputs

10-Bit × 6-ch. (with S/H)

Special Ports

Buzzer output, remote control carrier signal output, high-current drive port

ROM Correction

Correcting address designation : up to 3 addresses possible

See the next page for electrical characteristics, pin assignment and support tool.

www.DataSheet4U.com

www.DataSheet4U.com

Electrical Characteristics

Supply current

Parameter	Symbol	Condition	Limit			Unit
			min	typ	max	
Operating supply current	IDD1	fosc = 20 MHz, VDD = 3 V, (fs = fosc/2)		5	12	mA
	IDD2	fosc = 8.39 MHz, VDD = 3 V, (fs = fosc/2)		2	5	mA
	IDD3	fx = 32.768 kHz, VDD = 3 V, (fs = fx/2)			40	µA
Supply current at HALT	IDD4	fx = 32.768 kHz, VDD = 3 V, Ta = 25°C		4	8	µA
	IDD5	fx = 32.768 kHz, VDD = 3 V			30	µA
Supply current at STOP	IDD6	VDD = 3 V, Ta = 25°C			2	µA
	IDD7	VDD = 3 V			20	µA

Ta = −40°C to +85°C, VDD = 1.8 V to 3.6 V, VSS = 0 V

Note) Ta = −20°C to +70°C for a flash memory built-in version. Supply voltage range ans supply current ratings are also different from the values mentioned above. Refer to Chapter 18 “Flash EEPROM” for detailes

Pin Assignment

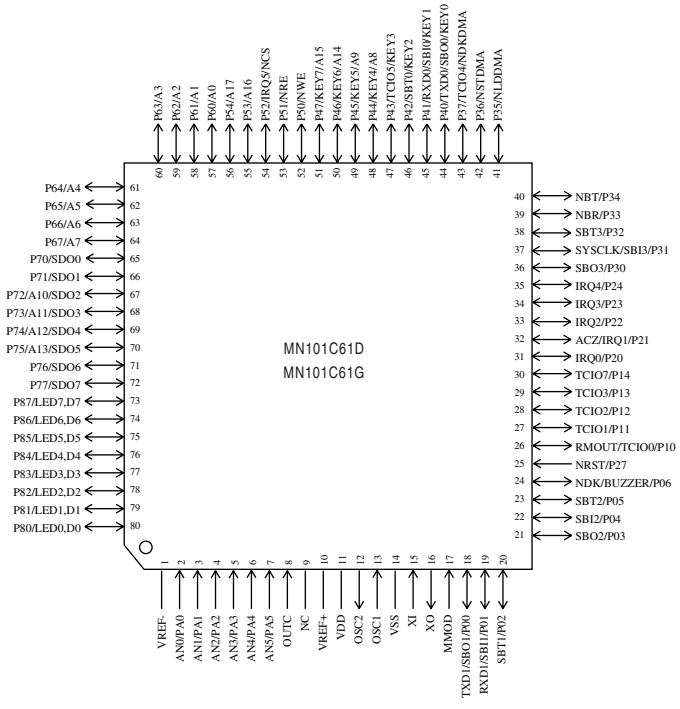

TQFP080-P-1212D *Lead-free

NC serves as the VPP pin in the MN101CF61G, and cannot be used as a user pin.

www.DataSheet4U.com

www.DataSheet4U.com

Support Tool

In-circuit Emulator	PX-ICE101C / D + PX-PRB101C61-TQFP080-P-1212-M	
Flash Memory Built-in Type	Type	MN101CF61G
	ROM (× 8-bit)	128 K
	RAM (× 8-bit)	12 K
	Minimum instruction execution time	0.1 µs (at 2.7 V to 3.6 V, 20 MHz) 0.2 µs (at 2.7 V to 3.6 V, 10 MHz) 0.5 µs (at 2.7 V to 3.6 V, 4 MHz) 125 µs (at 2.7 V to 3.6 V, 32 kHz)
	Package	TQFP080-P-1212D *Lead-free
	Type	MN101CF60G
	ROM (× 8-bit)	128 K
	RAM (× 8-bit)	12 K
	Minimum instruction execution time	0.1 µs (at 2.5 V to 3.0 V, 20 MHz) 0.2 µs (at 2.2 V to 3.0 V, 10 MHz) 0.5 µs (at 2.2 V to 3.0 V, 4 MHz) 125 µs (at 2.2 V to 3.0 V, 32 kHz)
	Package	TQFP080-P-1212D *Lead-free

www.DataSheet4U.com

www.DataSheet4U.com

❑ MN101C62D , MN101C62F

Type	MN101C62D	MN101C62F
ROM (×8-bit)	64 K	96 K
RAM (×8-bit)	2 K	4 K
Package	LQFP080-P-1414A *Lead-free	
Minimum Instruction Execution Time	Standard: 0.10 µs (at 4.5 V to 5.5 V, 20 MHz) 0.25 µs (at 2.7 V to 5.5 V, 8 MHz) 1.00 µs (at 2.0 V to 5.5 V, 2 MHz)* 125 µs (at 2.0 V to 5.5 V, 32 kHz)*	Double speed: 0.125 µs (at 4.5 V to 5.5 V, 8 MHz) 0.25 µs (at 3.0 V to 5.5 V, 4 MHz) 62.5 µs (at 2.0 V to 5.5 V, 32 kHz)*
	* The lower limit for operation guarantee for flash memory built-in type is 2.5 V.	
Interrupts	• Watchdog • External 0 • External 1 • External 2 • External 3 • External 4 • Timer 0 • Timer 1 • Timer 2 • Timer 3 • Timer 4 • Timer 6 • Time base • Timer 7 (2 systems) • Timer 8 (2 systems) • Automatic transfer completion • Serial 0 (2 systems) • Serial 1 (2 systems) • Serial 2 • A/D conversion finish • Key interrupt	

Timer Counter

Timer counter 0 : 8-bit × 1
(square-wave/8-bit PWM output, event count, generation of remote control carrier, simple pulse width measurement)
- Clock source ····· 1/2, 1/4 of system clock frequency; 1/1, 1/4, 1/16, 1/32, 1/64 of OSC oscillation clock frequency; 1/1 of XI oscillation clock frequency; external clock input
- Interrupt source ····· coincidence with compare register 0

Timer counter 1 : 8-bit × 1 (square-wave output, event count, synchronous output event, serial baud rate timer)
- Clock source ····· 1/2, 1/8 of system clock frequency; 1/1, 1/4, 1/16, 1/64, 1/128 of OSC oscillation clock frequency; 1/1 of XI oscillation clock frequency; external clock input
- Interrupt source ····· coincidence with compare register 1

Timer counter 0, 1 can be cascade-connected.

Timer counter 2 : 8-bit × 1
(square-wave output, event count, sychronous output event, simple pulse width measurement, generation of real time, serial baud rate timer)
- Clock source ····· 1/2, 1/4 of system clock frequency; 1/1, 1/4, 1/16, 1/32, 1/64 of OSC oscillation clock frequency; 1/1 of XI oscillation clock frequency; external clock input
- Interrupt source ····· coincidence with compare register 2

Timer counter 3 : 8-bit × 1
(square-wave output, event count, generation of remote control carrier, serial baud rate timer)
- Clock source ····· 1/2, 1/8 of system clock frequency; 1/1, 1/4, 1/16, 1/64, 1/128 of OSC oscillation clock frequency; 1/1 of XI oscillation clock frequency; external clock input
- Interrupt source ····· coincidence with compare register 3

Timer counter 2, 3 can be cascade-connected.

Timer counter 4 : 8-bit × 1
(square-wave/8-bit PWM output, event count, generation of remote control carrier, simple pulse width measurement)
- Clock source ····· 1/2, 1/4 of system clock frequency; 1/1, 1/4, 1/16, 1/32, 1/64 of OSC oscillation clock frequency; 1/1 of XI oscillation clock frequency; external clock input
- Interrupt source ····· coincidence with compare register 0

Timer counter 6 : 8-bit freerun timer
- Clock source ····· 1/1 of system clock frequency; 1/1, 1/128, 1/8192 of OSC oscillation clock frequency; 1/1, 1/4096, 1/8192 of XI oscillation clock frequency
- Interrupt source ····· coincidence with compare register 6

www.DataSheet4U.com

www.DataSheet4U.com

Timer Counter (Continue)

Timer counter 7 : 16-bit × 1
(square-wave output, 16-bit PWM output (cycle / duty continuous variable), event count, synchronous output evevt, pulse width measurement, input capture, generation of real time)
Clock source ····· 1/1, 1/2, 1/4, 1/16 of system clock frequency; 1/1, 1/2, 1/4, 1/16 of OSC oscillation clock frequency; 1/1, 1/2, 1/4, 1/16 of external clock input frequency
Interrupt source ····· coincidence with compare register 7 (2 lines)

Watchdog timer
Interrupt source ····· 1/65536, 1/262144, 1/1048576 of system clock frequency

Timer counter 8 : 16-bit × 1
(square-wave output, 16-bit PWM output (cycle / duty continuous variable), event count, synchronous output evevt, pulse width measurement, input capture, generation of real time)
Clock source ····· 1/1, 1/2, 1/4, 1/16 of system clock frequency; 1/1, 1/2, 1/4, 1/16 of OSC oscillation clock frequency; 1/1, 1/2, 1/4, 1/16 of external clock input frequency
Interrupt source ····· coincidence with compare register 7 (2 lines)

Watchdog timer
Interrupt source ····· 1/65536, 1/262144, 1/1048576 of system clock frequency

Serial Interface

Serial 0 : synchronous type/UART (full-duplex) × 1
Clock source ····· 1/2, 1/4 of system clock frequency; pulse output of timer counter 1 or 2; 1/2, 1/4, 1/16, 1/64 of OSC oscillation clock frequency

Serial 1 : synchronous type/UART (full-duplex) × 1
Clock source ····· 1/2, 1/4 of system clock frequency; pulse output of timer counter 2 or 3; 1/2,1/8 of timer counter 2 output; 1/2, 1/4, 1/16, 1/64 of OSC oscillation clock frequency

Serial 2 : synchronous type / single-master I²C
Clock source ····· 1/2, 1/4 of system clock frequency; pulse output of timer counter 2 or 3; 1/2, 1/4, 1/8, 1/32 of OSC oscillation clock frequency

I/O Pins	**I/O**	68	• Common use • Specified pull-up resistor available • Input/output selectable (bit unit)
A/D Inputs			10-bit × 8-ch. (with S/H)
Special Ports			Buzzer output, remote control carrier signal output, high-current drive port
ROM Correction			Correcting address designation: up to 3 addresses possible

See the next page for pin assignment and support tool.

www.DataSheet4U.com

www.DataSheet4U.com

Electrical Characteristics

Supply current

Parameter	Symbol	Condition	Limit			Unit
			min	typ	max	
Operating supply current	IDD1	fosc = 20 MHz, VDD = 5 V		15(20)	30(40)	mA
	IDD2	fx = 32 kHz, VDD = 3 V		30(50)	60(120)	µA
Supply current at HALT	IDD3	fx = 32 kHz, VDD = 3 V, Ta = 25°C		6	8	µA
	IDD4	fx = 32 kHz, VDD = 3 V, Ta = 85°C			30	µA
Supply current at STOP	IDD5	VDD = 5 V, Ta = 25°C			2	µA
	IDD6	VDD = 5 V, Ta = 85°C			50	µA

( ) : Flash memory built-in type

Pin Assignment

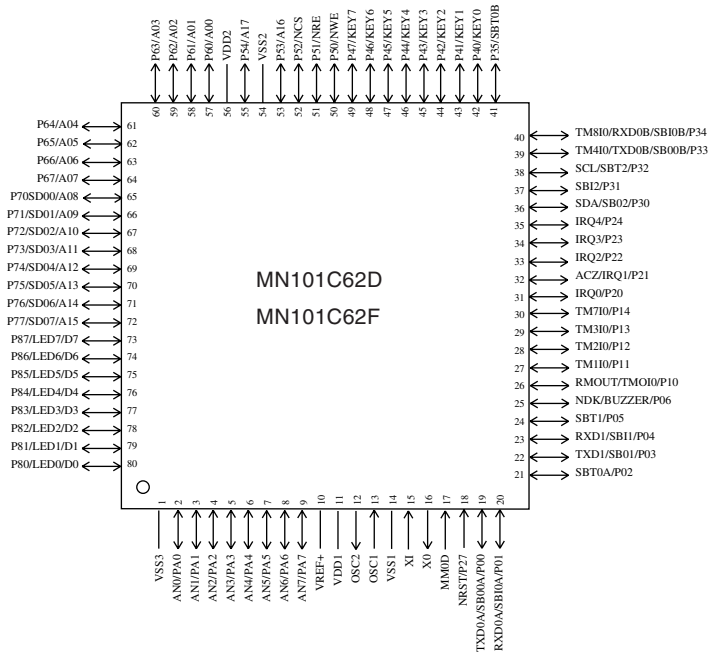

LQFP080-P-1414A *Lead-free

www.DataSheet4U.com

www.DataSheet4U.com

Support Tool

In-circuit Emulator	PX-ICE101C / D + PX-PRB101C62-LQFP080-P-1414A-M		
Flash Memory Built-in Type	Type	MN101CF62G	
	ROM (× 8-bit)	128 K	
	RAM (× 8-bit)	10 K	
	Minimum instruction execution time	Standaed:	0.1 µs (at 4.5 V to 5.5 V, 20 MHz)
			0.25 µs (at 2.7 V to 5.5 V, 8 MHz)
			1.0 µs (at 2.5 V to 5.5 V, 2 MHz)
			125 µs (at 2.5 V to 5.5 V, 32 kHz)
		Double speed:	0.125 µs (at 4.5 V to 5.5 V, 20 MHz)
			0.25 µs (at 3.0 V to 5.5 V, 8 MHz)
			62.5 µs (at 2.5 V to 5.5 V, 32 kHz)
	Package	LQFP080-P-1414A *Lead-free	

www.DataSheet4U.com

www.DataSheet4U.com

❑ MN101C67D, MN101C67G

Type	MN101C67D	MN101C67G
ROM (×8-bit)	64 K	128 K
RAM (×8-bit)	6 K	10 K
Package	TQFP080-P-1212D *Lead-free	
Minimum Instruction Execution Time	Standard: 0.1 µs (at 2.5 V to 3.6 V, 20 MHz)* 0.2 µs (at 2.1 V to 3.6 V, 10 MHz)* 0.5 µs (at 1.8 V to 3.6 V, 4 MHz)* 62.5 µs (at 1.8 V to 3.6 V, 32 kHz)* Double speed: 0.119 µs (at 2.5 V to 3.6 V, 8.39 MHz)* * The operation guarantee range for flash memory built-in type is 2.7 V to 3.6 V.	
Interrupts	• RESET • Watchdog • External 0 • External 1 • External 2 • External 3 • External 4 • External 5 • Timer 0 • Timer 1 • Timer 2 • Timer 3 • Timer 4 • Timer 5 • Timer 6 • Time base • Serial 0 reception • Serial 0 transmission • Serial 1 reception • Serial 1 transmission • Serial 2 • Serial 3 • Serial 4 • Automatic transfer finish • A/D conversion finish • Timer 7 (2 systems) • Key interrupts (8 lines)	

Timer Counter

Timer counter 0 : 8-bit × 1
(square-wave/8-bit PWM output, event count, generation of remote control carrier, pulse width measurement)
- Clock source ····· 1/2, 1/4 of system clock frequency; 1/1, 1/4, 1/16, 1/32, 1/64 of OSC oscillation clock frequency; 1/1 of XI oscillation clock frequency; external clock input
- Interrupt source ····· coincidence with compare register 0

Timer counter 1 : 8-bit × 1 (square-wave output, event count, synchronous output event)
- Clock source ····· 1/2, 1/8 of system clock frequency; 1/1, 1/4, 1/16, 1/64, 1/128 of OSC oscillation clock frequency; 1/1 of XI oscillation clock frequency; external clock input
- Interrupt source ····· coincidence with compare register 1

Timer counter 0, 1 can be cascade-connected.

Timer counter 2 : 8-bit × 1
(square-wave/8-bit PWM output, event count, synchronous output event, pulse width measurement)
- Clock source ····· 1/2, 1/4 of system clock frequency; 1/1, 1/4, 1/16, 1/32, 1/64 of OSC oscillation clock frequency; 1/1 of XI oscillation clock frequency; external clock input
- Interrupt source ····· coincidence with compare register 2

Timer counter 3 : 8-bit × 1 (square-wave output, event count, generation of remote control carrier)
- Clock source ····· 1/2, 1/8 of system clock frequency; 1/1, 1/4, 1/16, 1/64, 1/128 of OSC oscillation clock frequency; 1/1 of XI oscillation clock frequency; external clock input
- Interrupt source ····· coincidence with compare register 3

Timer counter 2, 3 can be cascade-connected.

Timer counter 4 : 8-bit × 1
(square-wave/8-bit PWM output, event count, pulse width measurement, serial 1 baud rate timer)
- Clock source ····· 1/2, 1/4 of system clock frequency; 1/1, 1/4, 1/16, 1/32, 1/64 of OSC oscillation clock frequency; 1/1 of XI oscillation clock frequency; 1/1 of external clock input frequency
- Interrupt source ····· coincidence with compare register 4

Timer counter 5 : 8-bit × 1
(square-wave/8-bit PWM output, event count, pulse width measurement, serial 0 baud rate timer)
- Clock source ····· 1/2, 1/4 of system clock frequency; 1/1, 1/4, 1/16, 1/32, 1/64 of OSC oscillation clock frequency; 1/1 of XI oscillation clock frequency; 1/1 of external clock input frequency
- Interrupt source ····· coincidence with compare register 5

www.DataSheet4U.com

www.DataSheet4U.com

Timer Counter (Continue)			Timer counter 6 : 8-bit freerun timer Clock source ····· 1/1 of system clock frequency; 1/1, 1/4096, 1/8192 of OSC oscillation clock frequency; 1/1, 1/4096, 1/8192 of XI oscillation clock frequency Interrupt source ····· coincidence with compare register 6 Timer counter 7 : 16-bit × 1 (square-wave/16-bit PWM output, cycle / duty continuous variable, event count, synchronous output evevt, pulse width measurement, input capture) Clock source ····· 1/1, 1/2, 1/4, 1/16 of system clock frequency; 1/1, 1/2, 1/4, 1/16 of OSC oscillation clock frequency; 1/1, 1/2, 1/4, 1/16 of external clock input frequency Interrupt source ····· coincidence with compare register 7 (2 lines) Time base timer (one-minute count setting) Clock source ····· 1/1 of OSC oscillation clock frequency; 1/1 of XI oscillation clock frequency Interrupt source ····· 1/128, 1/256, 1/512, 1/1024, 1/8192, 1/32768 of clock source frequency Watchdog timer Interrupt source ····· 1/65536, 1/262144, 1/1048576 of system clock frequency
DMA Controller (Automatic Data Transfer)			Max. Transfer cycles : 255 Starting factor : external request, various types of interrupt, software Transfer mode : 1-byte transfer, word transfer, burst transfer
Serial Interface			Serial 0 : synchronous type / UART (full-duplex) × 1 Clock source ····· 1/2, 1/4 of system clock frequency; pulse output of timer counter 5; 1/2, 1/4, 1/16, 1/64 of OSC oscillation clock frequency Serial 1 : synchronous type / UART (full-duplex) × 1 Clock source ····· 1/2, 1/4 of system clock frequency; pulse output of timer counter 4; 1/2, 1/4, 1/16, 1/64 of OSC oscillation clock frequency Serial 2 : synchronous type × 1 Clock source ····· 1/2, 1/4 of system clock frequency; pulse output of timer counter 3; 1/2, 1/4, 1/16, 1/32 of OSC oscillation clock frequency Serial 3 : synchronous type/single-master I^2C × 1 Clock source ····· 1/2, 1/4 of system clock frequency; pulse output of timer counter 3; 1/2, 1/4, 1/16, 1/32 of OSC oscillation clock frequency Serial 4 : I^2C slave × 1 Applicable for I^2C high-speed transfer mode, 7 bit/10bit address setting, general call
I/O Pins	**I/O**	62	• Common use • Specified pull-up resistor available • Input/output selectable (bit unit)
	Input	7	• Common use • Specified pull-up resistor available
A/D Inputs			10-bit × 7-ch. (with S/H)
Special Ports			Buzzer output, remote control carrier signal output, high-current drive port
ROM Correction			Correcting address designation: up to 3 addresses possible

See the next page for electrical characteristics, pin assignment and support tool.

www.DataSheet4U.com

www.DataSheet4U.com

Electrical Characteristics

Supply current

Parameter	Symbol	Condition	Limit			Unit
			min	typ	max	
Operating supply current	IDD1	fosc = 20 MHz, VDD = 3 V, (fs = fosc/2)		5	12	mA
	IDD2	fosc = 8.39 MHz, VDD = 3 V, (fs = fosc/2)		2	5	mA
	IDD3	fx = 32.768 kHz, VDD = 3 V, (fs = fx/2)			40	µA
Supply current at HALT	IDD4	fx = 32.768 kHz, VDD = 3 V, Ta = 25°C		4	8	µA
	IDD5	fx = 32.768 kHz, VDD = 3 V			30	µA
Supply current at STOP	IDD6	VDD = 3 V, Ta = 25°C			2	µA
	IDD7	VDD = 3 V, Ta = 85°C			20	µA

Ta = −40°C to +85°C, VDD = 1.8 V to 3.6 V, VSS = 0 V

Pin Assignment

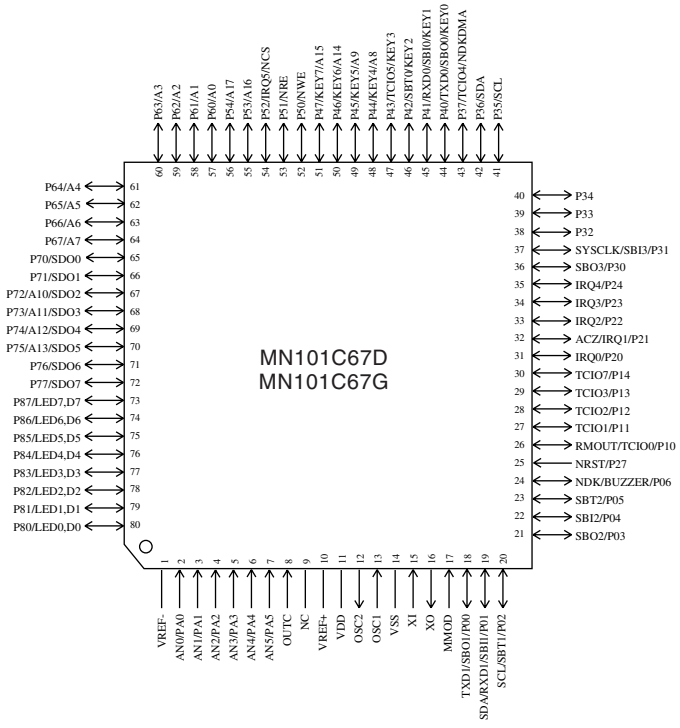

TQFP080-P-1212D *Lead-free

NC serves as the VPP pin in the MN101CF67G, and cannot be used as a user pin.

www.DataSheet4U.com

www.DataSheet4U.com

Support Tool

In-circuit Emulator	PX-ICE101C / D + PX-PRB101C67-TQFP080-P-1212-M	
Flash Memory Built-in Type	Type	MN101CF67G
	ROM (× 8-bit)	128 K
	RAM (× 8-bit)	10 K
	Minimum instruction execution time	Standard: 0.1 µs (at 2.7 V to 3.6 V, 20 MHz)
	Package	TQFP080-P-1212D *Lead-free

www.DataSheet4U.com

www.DataSheet4U.com

❑ MN101CF91D

Type	MN101CF91D
ROM (×8-bit)	64K (flash memory)
RAM (×8-bit)	4K
Package	TQFP048-P-0707B *Lead-free
Minimum Instruction Execution Time	0.1 µs (at 2.7 V to 3.6 V, 10 MHz) 62.5 µs (at 2.7 V to 3.6 V, 32 kHz)
Interrupts	• RESET • Watchdog • External 0 • External 1 • External 2 • External 3 • External 4 • External 5 • External 6 (key interrupt dedicated) • Timer 0 • Timer 1 • Timer 2 • Timer 3 • Timer 4 • Timer 6 • Time base • Timer 7 (2 systems) • Timer 8 (2 systems) • Serial 0 (2 systems) • Serial 1 (2 systems) • Serial 2 (3 systems) • A/D conversion finish
Timer Counter	Timer counter 0: 8-bit × 1 (square-wave output, PWM output, event count, simple pulse width measurement) (square-wave/PWM output to large current terminal P50 (TM0OA) or P30 (TM0OB) possible) Clock source ····· 1/2, 1/4 of system clock frequency; 1/1, 1/4, 1/16, 1/32, 1/64 of OSC oscillation clock frequency; 1/1 of XI oscillation clock frequency; external clock input Interrupt source ····· coincidence with compare register 0 Timer counter 1: 8-bit × 1 (square-wave output, event count, serial transfer clock) Clock source ····· 1/2, 1/8 of system clock frequency; 1/1, 1/4, 1/16, 1/64, 1/128 of OSC oscillation clock frequency; 1/1 of XI oscillation clock frequency; external clock input Interrupt source ····· coincidence with compare register 1 Timer counter 0, 1 can be cascade-connected. Timer counter 2: 8-bit × 1 (square-wave output, PWM output, event count, simple pulse width measurement) (serial transfer clock) (square-wave/PWM output to large current terminal P52 (TM2OA) or P32 (TM2OB) possible) Clock source ····· 1/2, 1/4 of system clock frequency; 1/1, 1/4, 1/16, 1/32, 1/64 of OSC oscillation clock frequency; 1/1 of XI oscillation clock frequency; external clock input Interrupt source ····· coincidence with compare register 2 Timer counter 3: 8-bit × 1 (square-wave output, event count) Clock source ····· 1/2, 1/8 of system clock frequency; 1/1, 1/4, 1/16, 1/64, 1/128 of OSC oscillation clock frequency; 1/1 of XI oscillation clock frequency; external clock input Interrupt source ····· coincidence with compare register 3 Timer counter 2, 3 can be cascade-connected. Timer counter 4: 8-bit × 1 (square-wave output, PWM output, event count, simple pulse width measurement) Clock source ····· 1/2, 1/8 of system clock frequency; 1/1, 1/4, 1/16, 1/64, 1/128 of OSC oscillation clock frequency; 1/1 of XI oscillation clock frequency; external clock input Interrupt source ····· coincidence with compare register 4

www.DataSheet4U.com

www.DataSheet4U.com

Timer Counter (Continue)

Timer counter 6: 8-bit freerun timer

Clock source ····· 1/1 of system clock frequency;
1/1, 1/128, 1/8192 of OSC oscillation clock frequency;
1/1, 1/128, 1/8192 of XI oscillation clock frequency

Interrupt source ····· coincidence with compare register 6

Timer counter 7: 16-bit × 1
(square-wave output, PWM output (cycle / duty continuous variable), event count, pulse width measurement, input capture)
(square-wave/PWM output to large current terminal P51 (TM7O) possible)

Clock source ····· 1/1, 1/2, 1/4, 1/16 of system clock frequency;
1/1, 1/2, 1/4, 1/16 of OSC oscillation clock frequency;
1/1, 1/2, 1/4, 1/16 of external clock input frequency

Interrupt source ····· coincidence with compare register 7 (2 lines), input capture register

Timer counter 8: 16 bit × 1
(square-wave output, PWM output (cycle / duty continuous variable), event count, pulse width measurement, input capture)
(square-wave/PWM output to large current terminal P53 (TM8O) possible)

Clock source ····· 1/1, 1/2, 1/4, 1/16 of system clock frequency;
1/1, 1/2, 1/4, 1/16 of OSC oscillation clock frequency;
1/1, 1/2, 1/4, 1/16 of external clock input frequency

Interrupt source ····· coincidence with compare register 8 (2 lines), input capture register

Time base timer (one-minute count setting)

Clock source ····· 1/1 of OSC oscillation clock frequency;
1/1 of XI oscillation clock frequency

Interrupt source ····· 1/128, 1/256, 1/512, 1/1024, 1/4096, 1/8192, 1/16384, 1/32768 of clock source frequency

Watchdog timer

Interrupt source ····· 1/65536, 1/262144, 1/1048576 of system clock frequency

Serial Interface

Serial 0: synchronous type/UART (full-duplex) × 1

Clock source ····· 1/2, 1/4 of system clock frequency; pulse output of timer counter 1 or 2;
1/2, 1/4, 1/16, 1/64 of OSC oscillation clock frequency, external clock

Serial 1: synchronous type/UART (full-duplex) × 1

Clock source ····· 1/2, 1/4 of system clock frequency; pulse output of timer counter 1 or 2;
1/2, 1/4, 1/16, 1/64 of OSC oscillation clock frequency, external clock

Serial 2: synchronous type/multi-master I^2C × 1
(applicable for 7-bit/10-bit address setting, general call, SMBus)

I/O Pins	**I/O**	37	• Common use • Specified pull-up resistor available • Input/output selectable (bit unit)

A/D Inputs 10-bit × 6-ch. (with S/H)

Special Ports Buzzer output, remote control carrier signal output, high-current drive port, clock output

www.DataSheet4U.com

www.DataSheet4U.com

Pin Assignment

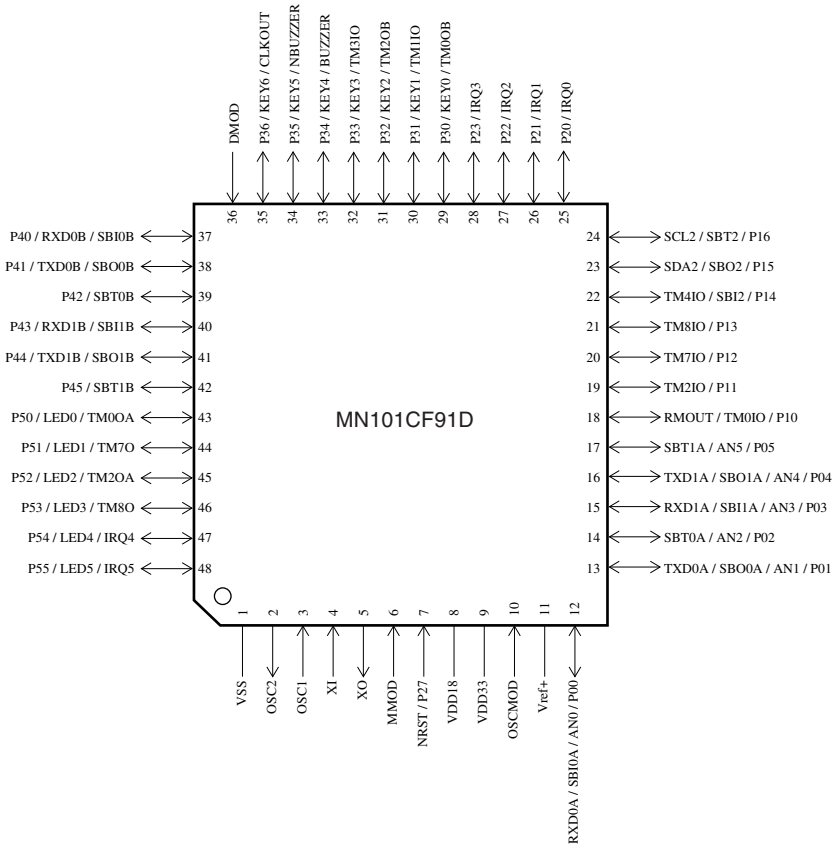

TQFP048-P-0707B *Lead-free

Support Tool

In-circuit Emulator PX-ICE101C / D + PX-PRB101C91-TQFP048-P-0707B-CN-M

www.DataSheet4U.com

www.DataSheet4U.com

www.DataSheet4U.com

www.DataSheet4U.com

❑ MN101C94A

Type	MN101C94A
ROM (×8-bit)	32 K
RAM (×8-bit)	1 K
Package	QFP044-P-1010F *Lead-free
Minimum Instruction Execution Time	0.10 µs (at 4.5 V to 5.5 V, 20 MHz) 0.238 µs (at 2.7 V to 5.5 V, 8.39 MHz) 0.477 µs (at 2.0 V to 5.5 V, 4.19 MHz)* * The lower limit for operation guarantee for flash memory built-in type is 2.5 V.
Interrupts	• RESET • Watchdog • External 0 • External 1 • External 2 • Timer 0 • Timer 1 • Timer 2 • Timer 3 • Timer 4 • Timer 5 • Time base • Serial 0 • A/D conversion finish
Timer Counter	Timer counter 0 : 8-bit × 1 (square-wave/8-bit PWM output, event count, generation of remote control carrier) Clock source ····· 1/1, 1/4 of system clock frequency; 1/1 of OSC oscillation clock frequency; external clock input Interrupt source ····· coincidence with compare register 0 Timer counter 1 : 8-bit × 1 (square-wave output, event count, synchronous output event) Clock source ····· 1/16, 1/64 of system clock frequency; external clock input Interrupt source ····· coincidence with compare register 1 Timer counter 0, 1 can be cascade-connected. Timer counter 2 : 8-bit × 1 (square-wave/8-bit PWM output, event count, synchronous output event) Clock source ····· 1/1, 1/4 of system clock frequency; external clock input Interrupt source ····· coincidence with compare register 2 Timer counter 3 : 8-bit × 1 (square-wave output, event count, generation of remote control carrier, serial 0 baud rate timer) Clock source ····· 1/4, 1/16 of system clock frequency; 1/1 of OSC oscillation clock frequency; external clock input Interrupt source ····· coincidence with compare register 3 Timer counter 2, 3 can be cascade-connected. Timer counter 4 : 16-bit × 1 (square-wave/16-bit PWM output, event count, synchronous output event, input capture) Clock source ····· 1/4, 1/16 of system clock frequency; 1/1 of OSC oscillation clock frequency; external clock input Interrupt source ····· coincidence with compare register 4 Time base timer (one-minute count setting, independently operable 8-bit timer counter 5) Clock source ····· 1/4 of system clock frequency; 1/1, 1/8192 of OSC oscillation clock frequency Interrupt source ····· coincidence with compare register 5; 1/8192 prescaler overflow Watchdog timer Interrupt source ····· 1/1048576 of system clock frequency

www.DataSheet4U.com

www.DataSheet4U.com

Serial Interface			Serial 0 : synchronous type/simple UART (half-duplex) × 1 Clock source ····· 1/2, 1/4, 1/16 of system clock frequency; output of timer counter 3
I/O Pins	**I/O**	26	• Common use: 17 • Specified pull-up resistor available • Input/output selectable (bit unit): 26
	Input	11	• Common use • Specified pull-up resistor available
A/D Inputs			10-bit × 8-ch. (with S/H)
Special Ports			Buzzer output, remote control carrier signal output, high-current drive port

Electrical Characteristics

Supply current

Parameter	Symbol	Condition	Limit			Unit
			min	typ	max	
Operating supply current	IDD1	fosc = 20 MHz, VDD = 5 V		15	40	mA
	IDD2	fosc = 8.39 MHz, VDD = 5 V		6	18	mA
Supply current at HALT	IDD3	ffosc = 8.39 MHz, VDD = 5 V, Ta = 25°C		1.2	3	mA
Supply current at STOP	IDD4	VDD = 5 V, Ta = 25°C			2	µA
	IDD5	VDD = 5 V, Ta = −40°C to +85°C			20(50)	µA

( ) : Flash memory built-in type

Pin Assignment

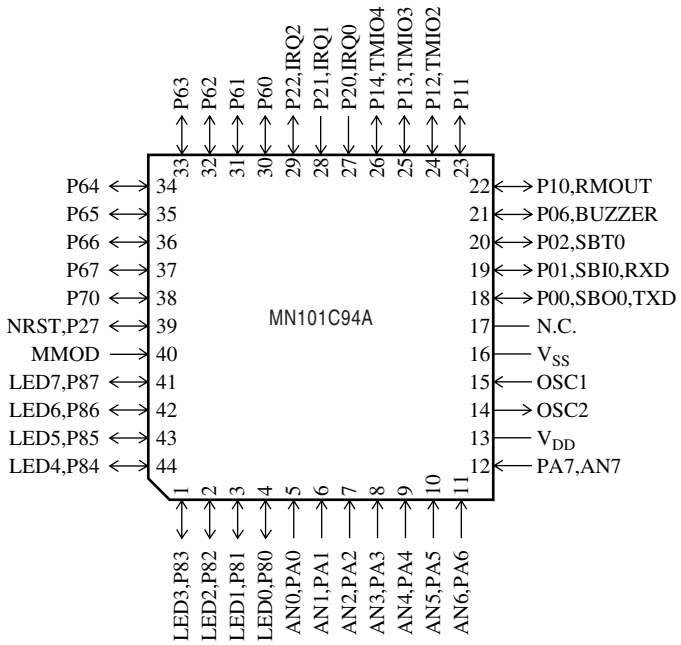

QFP044-P-1010F *Lead-free

www.DataSheet4U.com

Support Tool

In-circuit Emulator	PX-ICE101C/D+PX-PRB101C94-QFP044-P-1010	
Flash memory Built-in Type	Type	MN101CF94D [ES (Engineering Sample) available]
	ROM (× 8-bit)	64 K
	RAM (× 8-bit)	2 K
	Minimum instruction execution time	0.10 µs (at 4.5 V to 5.5 V, 20 MHz)
		0.238 µs (at 2.7 V to 5.5 V, 8.39 MHz)
		0.477 µs (at 2.5 V to 5.5 V, 4.19 MHz)
	Package	QFP044-P-1010F *Lead-free

www.DataSheet4U.com

www.DataSheet4U.com

www.DataSheet4U.com

www.DataSheet4U.com

❑ MN101CF95F, MN101CF95G

Type	MN101CF95F (under planning)	MN101CF95G (under development)
ROM (×8-bit)	96K	128K
RAM (×8-bit)	4K	6K
Package	TQFP080-P-1212D *Lead-free	
Minimum Instruction Execution Time	Standard: 0.2 µs (at 2.7 V to 3.6 V, 10 MHz)* 0.5 µs (at 2.7 V to 3.6 V, 4 MHz)* 62.5 µs (at 2.7 V to 3.6 V, 32 kHz)* Double speed: 0.1 µs (at 2.7 V to 3.6 V, 10 MHz)*	
Interrupts	• RESET • Watchdog • External 0 • External 1 • External 2 • External 3 • External 4 • External 5 • Timer 0 • Timer 1 • Timer 2 • Timer 3 • Timer 4 • Timer 5 • Timer 6 • Timer 7 • Timer 8 • Time base • Serial 0 reception • Serial 0 transmission • Serial 1 reception • Serial 1 transmission • Serial 2 • Serial 3 • Serial 4 reception • Serial 4 transmission • Automatic transfer finish • A/D conversion finish • Key interrupts (12 lines)	
Timer Counter	Timer counter 0: 8-bit × 1 (square-wave/8-bit PWM output, event count, pulse width measurement, serial clock output, real-time output control, generation of remote control carrier) Clock source ····· 1/2, 1/4 of system clock frequency; 1/1, 1/4, 1/16, 1/32, 1/64 of OSC oscillation clock frequency; 1/1 of XI oscillation clock frequency; external clock input Interrupt source ····· coincidence with compare register 0 Timer counter 1: 8-bit × 1 (square-wave output, event count, synchronous output event, serial clock output) Clock source ····· 1/2, 1/8 of system clock frequency; 1/1, 1/4, 1/16, 1/64, 1/128 of OSC oscillation clock frequency; 1/1 of XI oscillation clock frequency; external clock input Interrupt source ····· coincidence with compare register 1 Timer counter 0, 1 can be cascade-connected. Timer counter 2: 8-bit × 1 (square-wave output, PWM output, event count, pulse width measurement, synchronous timer, serial clock output) Clock source ····· 1/2, 1/4 of system clock frequency; 1/1, 1/4, 1/16, 1/32, 1/64 of OSC oscillation clock frequency; 1/1 of XI oscillation clock frequency; external clock input Interrupt source ····· coincidence with compare register 2 Timer counter 0, 1, 2 can be cascade-connected. Timer counter 3: 8-bit × 1 (square-wave output, event count, serial clock output) Clock source ····· 1/2, 1/8 of system clock frequency; 1/1, 1/4, 1/16, 1/64, 1/128 of OSC oscillation clock frequency; 1/1 of XI oscillation clock frequency; external clock input Interrupt source ····· coincidence with compare register 3 Timer counter 2, 3 can be cascade-connected. Timer counter 0, 1, 2, 3 can be cascade-connected. Timer counter 4: 8-bit × 1 (square-wave/8-bit PWM output, event count, pulse width measurement, real-time output control, serial clock output) Clock source ····· 1/2, 1/4 of system clock frequency; 1/1, 1/4, 1/16, 1/32, 1/64 of OSC oscillation clock frequency; 1/1 of XI oscillation clock frequency; 1/1 of external clock input frequency Interrupt source ····· coincidence with compare register 4	

www.DataSheet4U.com

www.DataSheet4U.com

Timer Counter (Continue)

Timer counter 5: 8-bit × 1
(square-wave/8-bit PWM output, event count, pulse width measurement, serial clock output)
- Clock source ····· 1/2, 1/8 of system clock frequency; 1/1, 1/4, 1/16, 1/64, 1/128 of OSC oscillation clock frequency; 1/1 of XI oscillation clock frequency; external clock input
- Interrupt source ····· coincidence with compare register 5

Timer counter 4, 5 can be cascade-connected.

Timer counter 6: 8-bit freerun timer
- Clock source ····· 1/1 of system clock frequency; 1/1, 1/128, 1/8192 of OSC oscillation clock frequency; 1/1, 1/128, 1/8192 of XI oscillation clock frequency
- Interrupt source ····· coincidence with compare register 6

Timer counter 7: 16-bit × 1
(square-wave/16-bit PWM output, cycle / duty continuous variable, event count, synchronous output evevt, pulse width measurement, input capture, real-time output control)
- Clock source ····· 1/1, 1/2, 1/4, 1/16 of system clock frequency; 1/1, 1/2, 1/4, 1/16 of OSC oscillation clock frequency; 1/1, 1/2, 1/4, 1/16 of external clock input frequency
- Interrupt source ····· coincidence with compare register 7 (2 lines)

Timer counter 8: 16-bit × 1
(square-wave output, PWM output (duty continuous variable), event count, pulse width measurement, input capture)
- Clock source ····· 1/1, 1/2, 1/4, 1/16 of system clock frequency; 1/1, 1/2, 1/4, 1/16 of OSC oscillation clock frequency; 1/1, 1/2, 1/4, 1/16 of external clock input frequency
- Interrupt source ····· coincidence with compare register 8 (2 lines)

Time base timer (one-minute count setting)
- Clock source ····· 1/1 of OSC oscillation clock frequency; 1/1 of XI oscillation clock frequency
- Interrupt source ····· 1/128, 1/256, 1/512, 1/1024, 1/8192, 1/32768 of clock source frequency

Watchdog timer
- Interrupt source ····· 1/65536, 1/262144, 1/1048576 of system clock frequency

DMA Controller (Automatic Data Transfer)

Max. Transfer cycles: 255
Starting factor: various types of interrupt, software
Transfer mode: 1-byte transfer, word transfer, burst transfer

Serial Interface

Serial 0: synchronous type / UART (full-duplex) × 1
- Clock source ····· 1/2, 1/4 of system clock frequency; pulse output of timer counter 1, 2; 1/2, 1/4, 1/16, 1/64 of OSC oscillation clock frequency

Serial 1: synchronous type / UART (full-duplex) × 1
- Clock source ····· 1/2, 1/4 of system clock frequency; pulse output of timer counter 2, 3; 1/2, 1/4, 1/16, 1/64 of OSC oscillation clock frequency

Serial 2: synchronous type / multi-master I^2C × 1
- Clock source ····· 1/2, 1/4 of system clock frequency; pulse output of timer counter 3, 4; 1/2, 1/4, 1/16, 1/32 of OSC oscillation clock frequency

Serial 3: synchronous type / single-master I^2C × 1
- Clock source ····· 1/2, 1/4 of system clock frequency; pulse output of timer counter 4, 5; 1/2, 1/4, 1/16, 1/32 of OSC oscillation clock frequency

Serial 4: synchronous type / UART (full-duplex) × 1
- Clock source ····· 1/2, 1/4 of system clock frequency; pulse output of timer counter 0, 5; 1/2, 1/4, 1/16, 1/64 of OSC oscillation clock frequency

www.DataSheet4U.com

www.DataSheet4U.com

I/O Pins	**I/O**	67	• Common use • Specified pull-up resistor available • Input/output selectable (bit unit)
A/D Inputs		10-bit × 11-ch. (with S/H)	
Special Ports		Buzzer output, remote control carrier signal output, high-current drive port	

Pin Assignment

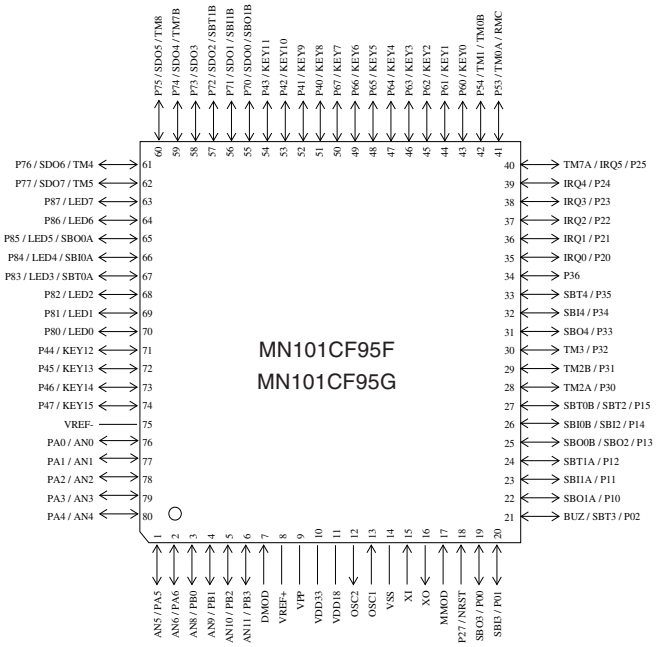

TQFP080-P-1212D *Lead-free

Support Tool

In-circuit Emulator	PX-ICE101C/D+PX-PRB101C95-TQFP080-P-1212D

www.DataSheet4U.com

www.DataSheet4U.com

www.DataSheet4U.com

www.DataSheet4U.com

❑ MN101CF96D, MN101CF96F

Type	MN101CF96D (under planning)	MN101CF96F (under planning)
ROM (×8-bit)	64K	96K
RAM (×8-bit)	3K	6K
Package	LQFP064-P-1414 *Lead-free	
Minimum Instruction Execution Time	Standard: 0.2 µs (at 2.7 V to 3.6 V, 10 MHz)* 0.5 µs (at 2.7 V to 3.6 V, 4 MHz)* 62.5 µs (at 2.7 V to 3.6 V, 32 kHz)* Double speed: 0.1 µs (at 2.7 V to 3.6 V, 10 MHz)*	
Interrupts	• RESET • Watchdog • External 0 • External 1 • External 2 • External 3 • External 4 • External 5 • Timer 0 • Timer 1 • Timer 2 • Timer 3 • Timer 4 • Timer 5 • Timer 6 • Timer 7 • Timer 8 • Time base • Serial 0 reception • Serial 0 transmission • Serial 1 reception • Serial 1 transmission • Serial 2 • Serial 3 • Automatic transfer finish • A/D conversion finish • Key interrupts (8 lines)	
Timer Counter	Timer counter 0: 8-bit × 1 (square-wave/8-bit PWM output, event count, pulse width measurement, serial clock output, real-time output control, generation of remote control carrier) Clock source ····· 1/2, 1/4 of system clock frequency; 1/1, 1/4, 1/16, 1/32, 1/64 of OSC oscillation clock frequency; 1/1 of XI oscillation clock frequency; external clock input Interrupt source ····· coincidence with compare register 0 Timer counter 1: 8-bit × 1 (square-wave output, event count, synchronous output event, serial clock output) Clock source ····· 1/2, 1/8 of system clock frequency; 1/1, 1/4, 1/16, 1/64, 1/128 of OSC oscillation clock frequency; 1/1 of XI oscillation clock frequency; external clock input Interrupt source ····· coincidence with compare register 1 Timer counter 0, 1 can be cascade-connected. Timer counter 2: 8-bit × 1 (square-wave output, PWM output, event count, pulse width measurement, synchronous timer, serial clock output) Clock source ····· 1/2, 1/4 of system clock frequency; 1/1, 1/4, 1/16, 1/32, 1/64 of OSC oscillation clock frequency; 1/1 of XI oscillation clock frequency; external clock input Interrupt source ····· coincidence with compare register 2 Timer counter 0, 1, 2 can be cascade-connected. Timer counter 3: 8-bit × 1 (square-wave output, event count, serial clock output) Clock source ····· 1/2, 1/8 of system clock frequency; 1/1, 1/4, 1/16, 1/64, 1/128 of OSC oscillation clock frequency; 1/1 of XI oscillation clock frequency; external clock input Interrupt source ····· coincidence with compare register 3 Timer counter 2, 3 can be cascade-connected. Timer counter 0, 1, 2, 3 can be cascade-connected. Timer counter 4: 8-bit × 1 (square-wave/8-bit PWM output, event count, pulse width measurement, real-time output control, serial clock output) Clock source ····· 1/2, 1/4 of system clock frequency; 1/1, 1/4, 1/16, 1/32, 1/64 of OSC oscillation clock frequency; 1/1 of XI oscillation clock frequency; 1/1 of external clock input frequency Interrupt source ····· coincidence with compare register 4	

www.DataSheet4U.com

www.DataSheet4U.com

Timer Counter (Continue)

Timer counter 5: 8-bit × 1
(square-wave/8-bit PWM output, event count, pulse width measurement, serial clock output)
- Clock source ····· 1/2, 1/8 of system clock frequency; 1/1, 1/4, 1/16, 1/64, 1/128 of OSC oscillation clock frequency; 1/1 of XI oscillation clock frequency; external clock input
- Interrupt source ····· coincidence with compare register 5

Timer counter 4, 5 can be cascade-connected.

Timer counter 6: 8-bit freerun timer
- Clock source ····· 1/1 of system clock frequency; 1/1, 1/128, 1/8192 of OSC oscillation clock frequency; 1/1, 1/128, 1/8192 of XI oscillation clock frequency
- Interrupt source ····· coincidence with compare register 6

Timer counter 7: 16-bit × 1
(square-wave/16-bit PWM output, cycle / duty continuous variable, event count, synchronous output evevt, pulse width measurement, input capture, real-time output control)
- Clock source ····· 1/1, 1/2, 1/4, 1/16 of system clock frequency; 1/1, 1/2, 1/4, 1/16 of OSC oscillation clock frequency; 1/1, 1/2, 1/4, 1/16 of external clock input frequency
- Interrupt source ····· coincidence with compare register 7 (2 lines)

Timer counter 8: 16-bit × 1
(square-wave output, PWM output (duty continuous variable), event count, pulse width measurement, input capture)
- Clock source ····· 1/1, 1/2, 1/4, 1/16 of system clock frequency; 1/1, 1/2, 1/4, 1/16 of OSC oscillation clock frequency; 1/1, 1/2, 1/4, 1/16 of external clock input frequency
- Interrupt source ····· coincidence with compare register 8 (2 lines)

Time base timer (one-minute count setting)
- Clock source ····· 1/1 of OSC oscillation clock frequency; 1/1 of XI oscillation clock frequency
- Interrupt source ····· 1/128, 1/256, 1/512, 1/1024, 1/8192, 1/32768 of clock source frequency

Watchdog timer
- Interrupt source ····· 1/65536, 1/262144, 1/1048576 of system clock frequency

DMA Controller (Automatic Data Transfer)

Max. Transfer cycles: 255
Starting factor: various types of interrupt, software
Transfer mode: 1-byte transfer, word transfer, burst transfer

Serial Interface

Serial 0: synchronous type / UART (full-duplex) × 1
- Clock source ····· 1/2, 1/4 of system clock frequency; pulse output of timer counter 1, 2; 1/2, 1/4, 1/16, 1/64 of OSC oscillation clock frequency

Serial 1: synchronous type / UART (full-duplex) × 1
- Clock source ····· 1/2, 1/4 of system clock frequency; pulse output of timer counter 2, 3; 1/2, 1/4, 1/16, 1/64 of OSC oscillation clock frequency

Serial 2: synchronous type / multi-master I^2C × 1
- Clock source ····· 1/2, 1/4 of system clock frequency; pulse output of timer counter 3, 4; 1/2, 1/4, 1/16, 1/32 of OSC oscillation clock frequency

Serial 3: synchronous type / single-master I^2C × 1
- Clock source ····· 1/2, 1/4 of system clock frequency; pulse output of timer counter 4, 5; 1/2, 1/4, 1/16, 1/32 of OSC oscillation clock frequency

www.DataSheet4U.com

www.DataSheet4U.com

I/O Pins	**I/O**	51	• Common use • Specified pull-up resistor available • Input/output selectable (bit unit)
A/D Inputs		10-bit × 7-ch. (with S/H)	
Special Ports		Buzzer output, remote control carrier signal output, high-current drive port	

Pin Assignment

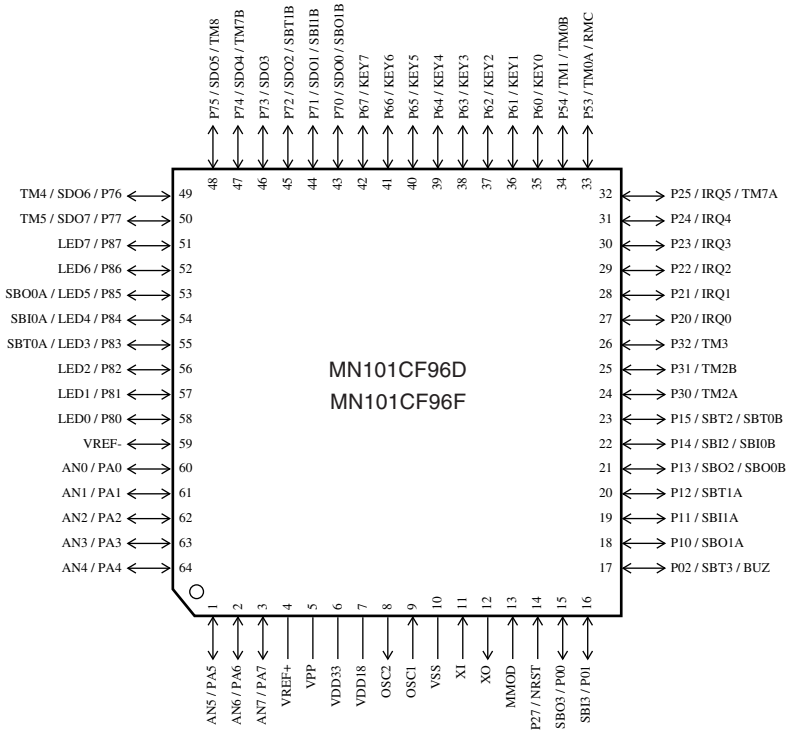

LQFP064-P-1414 *Lead-free

Support Tool

In-circuit Emulator	PX-ICE101C/D+PX-PRB101C96-LQFP064-P-1414

www.DataSheet4U.com

www.DataSheet4U.com

www.DataSheet4U.com

www.DataSheet4U.com

❑ MN101C97A, MN101C97D

Type	MN101C97A (under development)	MN101C97D (under development)
ROM (×8-bit)	32 K	64 K
RAM (×8-bit)	1.0 K	1 K
Package	TQFP048-P-0707B *Lead-free (under development), QFP044-P-1010F *Lead-free (under planning), QFN044-P-0606A *Lead-free (under planning)	
Minimum Instruction Execution Time	0.25 µs (at 2.2 V to 3.6 V, 8 MHz) 0.5 µs (at 1.8 V to 3.6 V, 4 MHz) 62.5 µs (at 1.8 V to 3.6 V, 32 kHz) * The lower limit for operation guarantee for flash memory built-in type is 2.2 V.	
Interrupts	• RESET • Watchdog • External 0 • External 1 • External 2 • External 3 • External 4 • External 5 • External 6 (key interrupt dedicated) • Timer 0 • Timer 1 • Timer 2 • Timer 3 • Timer 6 • Time base • Timer 7 (2 systems) • Serial 0 (2 systems) • Serial 3 • A/D conversion finish	
Timer Counter	Timer counter 0 : 8-bit × 1 (square-wave/8-bit PWM output, event count, generation of remote control carrier, simple pulse width measurement, added pluse (2-bit) system PWM output) (square-wave/PWM output to large current terminal P51 possible) Clock source ····· 1/2, 1/4 of system clock frequency; 1/1, 1/4, 1/16, 1/32, 1/64 of OSC oscillation clock frequency; 1/1 of XI oscillation clock frequency; external clock input Interrupt source ····· coincidence with compare register 0 Timer counter 1 : 8-bit × 1 (square-wave output, event count, synchronous output event) Clock source ····· 1/2, 1/8 of system clock frequency; 1/1, 1/4, 1/16, 1/64, 1/128 of OSC oscillation clock frequency; 1/1 of XI oscillation clock frequency; external clock input Interrupt source ····· coincidence with compare register 1 Timer counter 0, 1 can be cascade-connected. Timer counter 2 : 8-bit × 1 (square-wave output, added pluse (2-bit) system PWM output, PWM output, serial transfer clock output, event count, synchronous output event, simple pulse width measurement) (square-wave/PWM output to large current terminal P52 possible) Clock source ····· 1/2, 1/4 of system clock frequency; 1/1, 1/4, 1/16, 1/32, 1/64 of OSC oscillation clock frequency; 1/1 of XI oscillation clock frequency; external clock input Interrupt source ····· coincidence with compare register 2 Timer counter 3 : 8-bit × 1 (square-wave output, event count, generation of remote control carrier, serial transfer clock) Clock source ····· 1/2, 1/8 of system clock frequency; 1/1, 1/4, 1/16, 1/64, 1/128 of OSC oscillation clock frequency; 1/1 of XI oscillation clock frequency; external clock input Interrupt source ····· coincidence with compare register 3 Timer counter 2, 3 can be cascade-connected. Timer counter 6 : 8-bit freerun timer Clock source ····· 1/1 of system clock frequency; 1/1, 1/128, 1/8192 of OSC oscillation clock frequency; 1/1, 1/128, 1/8192 of XI oscillation clock frequency Interrupt source ····· coincidence with compare register 6 Timer counter 7 : 16-bit × 1 (square-wave output, 16-bit PWM output (cycle / duty continuous variable), event count, synchronous output event, pulse width measurement, input capture, real time output control, high performance IGBT output) (square-wave/PWM output to large current terminal P53 possible) Clock source ····· 1/1, 1/2, 1/4, 1/16 of system clock frequency; 1/1, 1/2, 1/4, 1/16 of OSC oscillation clock frequency; 1/1, 1/2, 1/4, 1/16 of external clock input frequency Interrupt source ····· coincidence with compare register 7 (2 lines), input capture register	

www.DataSheet4U.com

www.DataSheet4U.com

Timer Counter (Continue)

Timer counters 7, 8 can be cascade-connected.
(square-wave output, PWM input capture, pluse width measurement is possible as a 32-bit timer.)

Time base timer (one-minute count setting)
- Clock source ····· 1/1 of OSC oscillation clock frequency; 1/1 of XI oscillation clock frequency
- Interrupt source ····· 1/128, 1/256, 1/512, 1/1024, 1/4096, 1/8192, 1/16384, 1/32768, of clock source frequency

Watchdog timer
- Interrupt source ····· 1/65536, 1/262144, 1/1048576 of system clock frequency

Serial Interface

Serial 0 : synchronous type/UART (full-duplex) × 1
- Clock source ····· 1/2, 1/4 of system clock frequency; pulse output of timer counter 1 or 2; 1/2, 1/4, 1/16, 1/64 of OSC oscillation clock frequency, external clock

Serial 3 : synchronous type/single-master I^2C × 1
- Clock source ····· 1/2, 1/4 of system clock frequency; pulse output of timer counter 2 or 3; 1/2, 1/4, 1/16, 1/32 of OSC oscillation clock frequency, external clock

I/O Pins	I/O	38	• Common use • Specified pull-up resistor available • Input/output selectable (bit unit)

A/D Inputs

10-bit × 8-ch. (with S/H)

Special Ports

Buzzer output, remote control carrier signal output, high-current drive port

ROM Correction

Correcting address designation: up to 3 addresses possible

Electrical Characteristics

Supply current

Parameter	Symbol	Condition	Limit			Unit
			min	typ	max	
Operating supply current	IDD1	fosc = 4 MHz, VDD = 3 V		1	2.2	mA
	IDD2	fx = 32 kHz, VDD = 3 V		4	15	µA
Supply current at HALT	IDD3	fx = 32 kHz, VDD = 3 V, Ta = 25°C		2	10	µA
	IDD4	fx = 32 kHz, VDD = 3 V, Ta = −40°C to +85°C			40	µA
Supply current at STOP	IDD5	VDD = 3 V, Ta = 25°C			2	µA
	IDD6	VDD = 3 V, Ta = −40°C to +85°C			30	µA

See the next page for pin assignment and support tool.

www.DataSheet4U.com

www.DataSheet4U.com

Pin Assignment

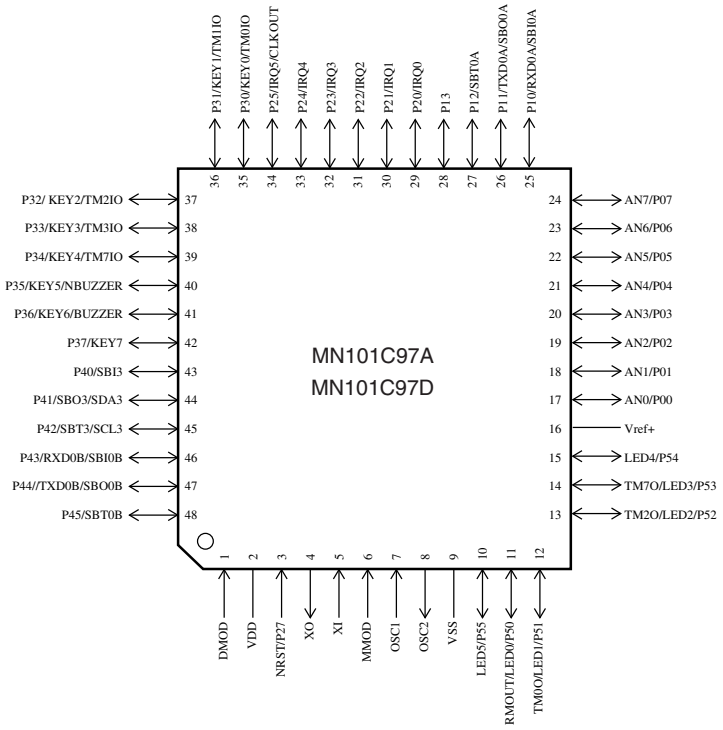

TQFP048-P-0707B *Lead-free
QFP044-P-1010F *Lead-free
QFN044-P-0606A *Lead-free

Support Tool

In-circuit Emulator

PX-ICE101C / D + PX-PRB101C97-TQFP048-P-0707B-M (under development)
PX-ICE101C / D + PX-PRB101C97-QFP044-P-1010 (under planning)

Flash Memory Built-in Type

Type	MN101CF97D
ROM (× 8-bit)	64 K
RAM (× 8-bit)	1 K
Minimum instruction execution time	0.250 µs (at 2.2 V to 3.6 V, 8.0 MHz) 0.500 µs (at 2.2 V to 3.6 V, 4 MHz) 62.5 µs (at 2.2 V to 3.6 V, 32 kHz)
Package	TQFP048-P-0707B *Lead-free (under development) QFP044-P-1010F *Lead-free (under planning) QFN044-P-0606A *Lead-free (under planning)

www.DataSheet4U.com

www.DataSheet4U.com

www.DataSheet4U.com

www.DataSheet4U.com

❑ MN101E16K, MN101E16M

Type	MN101E16K (under planning)	MN101E16M
ROM (×8-bit) External memory can be expanded	256 K	384 K
RAM (×8-bit) External memory can be expanded	12 K	20 K
Package	QFP100-P-1818B *Lead-free	
Minimum Instruction Execution Time	0.0588 µs (at 2.7 V to 3.6 V, 17 MHz at internal 2,4,8 times oscillation used) 0.1 µs (at 2.7 V to 3.6 V, 20 MHz) 30.6 µs (at 2.7 V to 3.6 V, 32.768 kHz)	
Interrupts	• RESET • Watchdog • External 0 • External 1 • External 2 • External 3 • External 4 • External 5 • Timer 0 • Timer 1 • Timer 2 • Timer 3 • Timer 4 • Timer 5 • Timer 6 • Timer 7 (2 systems) • Timer A, B, C, D, E • Time base • Serial 0 (2 systems) • Serial 1 (2 systems) • Serial 2 • Serial 3 (2 systems) • Serial 4 (2 systems) • Automatic transfer finish (2 systems) • A/D conversion finish • Key interrupts	
Timer Counter	Timer counter 0 : 8-bit × 1 (square-wave/8-bit PWM output, event count, simple pulse width measurement, real time output control) Clock source ····· 1/2, 1/4 of system clock frequency; 1/1, 1/4, 1/16, 1/32, 1/64 of OSC oscillation clock frequency; 1/1 of XI oscillation clock frequency; external clock input Interrupt source ····· coincidence with compare register 0 Timer counter 1 : 8-bit × 1 (square-wave output, event count, synchronous output event, 16-bit timer with casscade connection (Timer 0 and connection), serial clocke output) Clock source ····· 1/2, 1/8 of system clock frequency 1/1, 1/4, 1/16, 1/64, 1/128 of OSC oscillation clock frequency; 1/1 of XI oscillation clock frequency; external clock input Interrupt source ····· coincidence with compare register 1 Timer counter 0, 1 can be cascade-connected. Timer counter 2 : 8-bit × 1 (square-wave/8-bit PWM output, event count, synchronous output event, pulse width measurement, real time output control, serial baud rate timer) Clock source ····· 1/2, 1/4 of system clock frequency; 1/1, 1/4, 1/16, 1/32, 1/64 of OSC oscillation clock frequency; 1/1 of XI oscillation clock frequency; external clock input Interrupt source ····· coincidence with compare register 2 Timer counter 0, 1, 2 can be cascade-connected. Timer counter 3 : 8-bit × 1 (square-wave output, event count, serial baud rate timer) Clock source ····· 1/2, 1/8 of system clock frequency; 1/1, 1/4, 1/16, 1/64, 1/128 of OSC oscillation clock frequency; 1/1 of XI oscillation clock frequency; external clock input Interrupt source ····· coincidence with compare register 3 Timer counter 2, 3 can be cascade-connected. Timer counter 0, 1, 2, 3 can be cascade-connected. Timer counter 6 : 8-bit freerun timer , time base timer Clock source ····· 1/1 of system clock frequency; 1/1, 1/4096, 1/8192 of OSC oscillation clock frequency; 1/1, 1/4096, 1/8192 of XI oscillation clock frequency Interrupt generating cycle ··· 1/128, 1/256, 1/512, 1/1024, 1/8192 1/32768 of OSC oscillation clock frequency 1/128, 1/256, 1/512, 1/1024, 1/8192, 1/32768 of XI oscillation clock frequency Interrupt source ····· coincidence with compare register 6	

www.DataSheet4U.com

www.DataSheet4U.com

Timer Counter (Continue)	Timer counter 7 : 16-bit × 1 (square-wave/16-bit PWM output, cycle / duty continuous variable, event count, synchronous output evevt, pulse width measurement, input capture) Clock source ····· 1/1, 1/2, 1/4, 1/16 of system clock frequency; 1/1, 1/2, 1/4, 1/16 of OSC oscillation clock frequency; 1/1, 1/2, 1/4, 1/16 of external clock input frequency Interrupt source ····· coincidence with compare register 7 (2 lines) Timer counter A, B, C, D, E : 8-bit × 5 Clock source ····· 1/2, 1/4 of system clock frequency; 1/1, 1/2, 1/4, 1/8, 1/16. 1/32 of OSC oscillation clock frequency Interrupt source ····· coincidence with compare register A, B, C, D, E Time base timer (one-minute count setting) Clock source ····· 1/1 of OSC oscillation clock frequency; 1/1 of XI oscillation clock frequency Interrupt source ····· 1/128, 1/256, 1/512, 1/1024, 1/8192, 1/32768 of clock source frequency Watchdog timer Interrupt source ····· 1/65536, 1/262144, 1/1048576, 1/4194304 of system clock frequency
DMA Controller (Automatic Data Transfer)	Nomber of channels : 2 Max. Transfer cycles : 255 Starting factor : external request, various types of interrupt, software Transfer mode : 1-byte transfer, word transfer, burst transfer
Serial Interface	Serial 0 : synchronous type/UART (full-duplex) × 1 Clock source ····· 1/2, 1/4 of system clock frequency; pulse output of timer counter 2, A; 1/2, 1/4, 1/16, 1/64 of OSC oscillation clock frequency Serial 1 : synchronous type/UART (full-duplex) × 1 Clock source ····· 1/2, 1/4 of system clock frequency; pulse output of timer counter 3, B; 1/2, 1/4, 1/8, 1/16, 1/64 of OSC oscillation clock frequency Serial 2 : synchronous type/single-master I^2C× 1 Clock source ····· 1/2, 1/4 of system clock frequency; pulse output of timer counter 3, C; 1/2, 1/4, 1/16, 1/32 of OSC oscillation clock frequency Serial 3 : synchronous type/ I^2C × 1 Clock source ····· 1/2, 1/4 of system clock frequency; pulse output of timer counter 2, D; 1/2, 1/4, 1/16, 1/32 of OSC oscillation clock frequency Serial 4 : synchronous type/UART (full-duplex) × 1 Clock source ····· 1/2, 1/4 of system clock frequency; pulse output of timer counter 2, E ; 1/2, 1/4, 1/16, 1/64 of OSC oscillation clock frequency

I/O Pins	**I/O**	22	• (5 V IF port) Common use • Specified pull-up resistor available • Input/output selectable (bit unit)
		62	• (3 V IF port) Common use • Specified pull-up resistor available • Input/output selectable (bit unit)
		1	• (3 V IF port) Common use

A/D Inputs	10-bit × 8-ch. (with S/H)
Special Ports	Buzzer output, high-current drive port
Electrical Characteristics	T.B.D
Supply current	
ROM Correction	Correcting address designation: up to 7 addresses possible

See the next page for electrical characteristics, pin assignment and support tool.

www.DataSheet4U.com

Pin Assignment

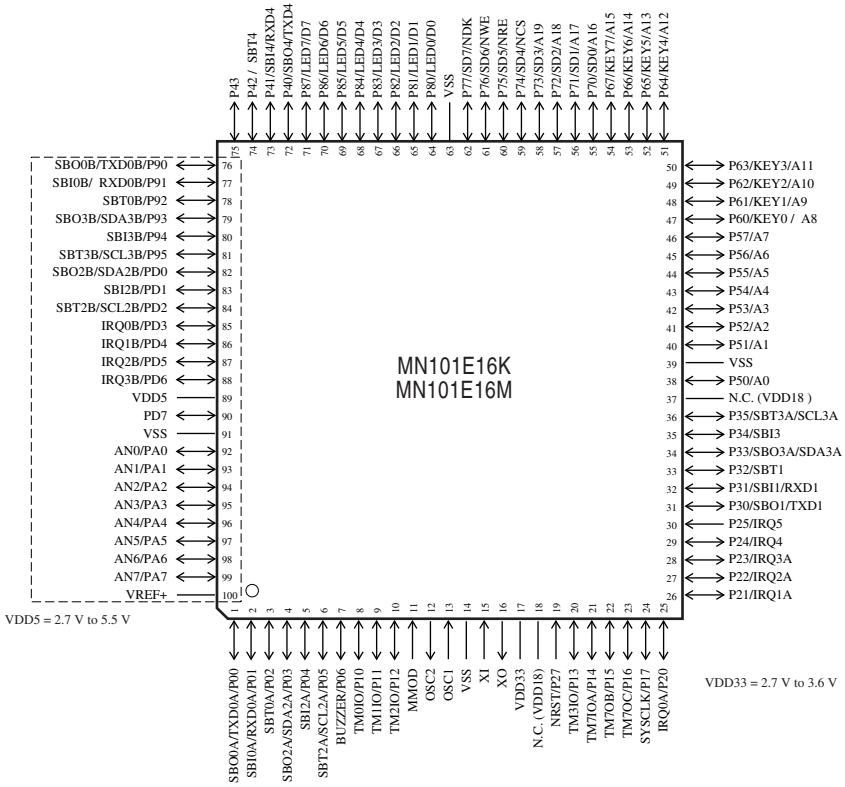

QFP100-P-1818B *Lead-free

LQFP100-P-1414 *Lead-free

( ): Flash memory built-in type

Support Tool

In-circuit Emulator	Under development	
Flash Memory Built-in Type	Type	MN101EF16N [ES (Engineering Sample) available]
	ROM (× 8-bit)	512 K
	RAM (× 8-bit)	30 K
	Minimum instruction execution time	0.0588 µs (at 2.7 V to 3.6 V, 17 MHz)
	Package	QFP100-P-1818B *Lead-free, LQFP100-P-1414 *Lead-free

www.DataSheet4U.com

www.DataSheet4U.com

www.DataSheet4U.com

www.DataSheet4U.com

❑ MN101C49G , MN101C49H , MN101C49K

Type	MN101C49G	MN101C49H	MN101C49K
ROM (×8-bit) External memory can be expanded	128 K	160 K	224 K
RAM (×8-bit) External memory can be expanded	4 K	6 K	10 K
Package	QFP100-P-1818B *Lead-free, LQFP100-P-1414 *Lead-free		

Minimum Instruction Execution Time

Standard: 0.10 µs (at 4.5 V to 5.5 V, 20 MHz)
0.238 µs (at 2.7 V to 5.5 V, 8.39 MHz)
125 µs (at 2.0 V to 5.5 V, 32 kHz)*
Double speed: 0.12 µs (at 4.5 V to 5.5 V, 8.39 MHz)
0.25 µs (at 3.0 V to 5.5 V, 4 MHz)
62.5 µs (at 2.0 V to 5.5 V, 32 kHz)*

* The lower limit for operation guarantee for EPROM built-in type is 2.7 V.
* The lower limit for operation guarantee for flash memory built-in type is 4.5 V.

Interrupts

• RESET • Watchdog • External 0 • External 1 • External 2 • External 3 • External 4 • External 5 • Timer 0 • Timer 1 • Timer 2 • Timer 3 • Timer 4 • Timer 6 • Timer 7 (2 systems) • Time base • Serial 0 • Serial 1 • Serial 2 • Serial 3 • Automatic transfer finish • A/D conversion finish • Key interrupts (8 lines)

Timer Counter

Timer counter 0 : 8-bit × 1
(square-wave/8-bit PWM output, event count, generation of remote control carrier, pulse width measurement)
Clock source ····· 1/2, 1/4 of system clock frequency; 1/1, 1/4, 1/16, 1/32, 1/64 of OSC oscillation clock frequency; 1/1 of XI oscillation clock frequency; external clock input
Interrupt source ····· coincidence with compare register 0

Timer counter 1 : 8-bit × 1 (square-wave output, event count, synchronous output event)
Clock source ····· 1/2, 1/8 of system clock frequency; 1/1, 1/4, 1/16, 1/64, 1/128 of OSC oscillation clock frequency; 1/1 of XI oscillation clock frequency; external clock input
Interrupt source ····· coincidence with compare register 1

Timer counter 0, 1 can be cascade-connected.

Timer counter 2 : 8-bit × 1
(square-wave/8-bit PWM output, event count, synchronous output event, pulse width measurement)
Clock source ····· 1/2, 1/4 of system clock frequency; 1/1, 1/4, 1/16, 1/32, 1/64 of OSC oscillation clock frequency; 1/1 of XI oscillation clock frequency; external clock input
Interrupt source ····· coincidence with compare register 2

Timer counter 3 : 8-bit × 1 (square-wave output, event count, generation of remote control carrier)
Clock source ····· 1/2, 1/8 of system clock frequency; 1/1, 1/4, 1/16, 1/64, 1/128 of OSC oscillation clock frequency; 1/1 of XI oscillation clock frequency; external clock input
Interrupt source ····· coincidence with compare register 3

Timer counter 2, 3 can be cascade-connected.

Timer counter 4 : 8-bit × 1
(square-wave/8-bit PWM output, event count, pulse width measurement, serial 1 baud rate timer)
Clock source ····· 1/2, 1/4 of system clock frequency; 1/1, 1/4, 1/16, 1/32, 1/64 of OSC oscillation clock frequency; 1/1 of XI oscillation clock frequency; 1/1 of external clock input frequency
Interrupt source ····· coincidence with compare register 4

Timer counter 6 : 8-bit freerun timer
Clock source ····· 1/1 of system clock frequency; 1/1, 1/4096, 1/8192 of OSC oscillation clock frequency; 1/1, 1/4096, 1/8192 of XI oscillation clock frequency
Interrupt source ····· coincidence with compare register 6

www.DataSheet4U.com

www.DataSheet4U.com

Timer Counter (Continue)			Timer counter 7 : 16-bit × 1 (square-wave/16-bit PWM output, cycle / duty continuous variable, event count, synchronous output evevt, pulse width measurement, input capture) Clock source ····· 1/1, 1/2, 1/4, 1/16 of system clock frequency; 1/1, 1/2, 1/4, 1/16 of OSC oscillation clock frequency; 1/1, 1/2, 1/4, 1/16 of external clock input frequency Interrupt source ····· coincidence with compare register 7 (2 lines) Time base timer (one-minute count setting) Clock source ····· 1/1 of OSC oscillation clock frequency; 1/1 of XI oscillation clock frequency Interrupt source ····· 1/128, 1/256, 1/512, 1/1024, 1/8192, 1/32768 of clock source frequency Watchdog timer Interrupt source ····· 1/65536, 1/262144, 1/1048576 of system clock frequency
DMA Controller (Automatic Data Transfer)			Max. Transfer cycles : 255 Starting factor : external request, various types of interrupt, software Transfer mode : 1-byte transfer, word transfer, burst transfer
Serial Interface			Serial 0 : synchronous type/UART (full-duplex) × 1 Clock source ····· 1/2, 1/4 of system clock frequency; pulse output of timer counter 2, 4; 1/2, 1/4, 1/16, 1/64 of OSC oscillation clock frequency Serial 1 : synchronous type/simple UART (half-duplex) × 1 Clock source ····· 1/2, 1/4 of system clock frequency; pulse output of timer counter 4; 1/2, 1/4, 1/16, 1/64 of OSC oscillation clock frequency Serial 2 : synchronous type × 1 Clock source ····· 1/2, 1/4 of system clock frequency; pulse output of timer counter 3; 1/2, 1/4, 1/16, 1/32 of OSC oscillation clock frequency Serial 3 : synchronous type/single-master I^2C × 1 Clock source ····· 1/2, 1/4 of system clock frequency; pulse output of timer counter 3; 1/2, 1/4, 1/16, 1/32 of OSC oscillation clock frequency
I/O Pins	**I/O**	73 (72)	• Common use • Specified pull-up resistor available • Input/output selectable (bit unit) ( ) : Flash memory built-in type.
	Input	15 (14)	• Common use • Specified pull-up resistor available ( ) : Flash memory built-in type.
A/D Inputs			10-bit × 8-ch. (with S/H)
D/A Outputs			8-bit × 4-ch.
Special Ports			Buzzer output, remote control carrier signal output, high-current drive port
ROM Correction			Correcting address designation: up to 3 addresses possible

See the next page for electrical characteristics, pin assignment and support tool.

www.DataSheet4U.com

www.DataSheet4U.com

Electrical Characteristics

Supply current

Parameter	Symbol	Condition	Limit			Unit
			min	typ	max	
Operating supply current	IDD1	fosc = 20 MHz, VDD = 5 V		30	70	mA
	IDD2	fosc = 8.39 MHz, VDD = 5 V		15	30	mA
	IDD3	fx = 32.768 kHz, VDD = 3 V		40	120	µA
Supply current at HALT	IDD4	fx = 32 kHz, VDD = 3 V (5 V), Ta = 25°C		5 (13)	11 (30)	µA
	IDD5	fx = 32.768 kHz, VDD = 3 V (5 V), Ta = 85°C			30 (90)	µA
Supply current at STOP	IDD6	VDD = 5 V, Ta = 25°C			3	µA
	IDD7	VDD = 5 V, Ta = 85°C			60	µA

( ) : Flash memory built-in type.

Pin Assignment

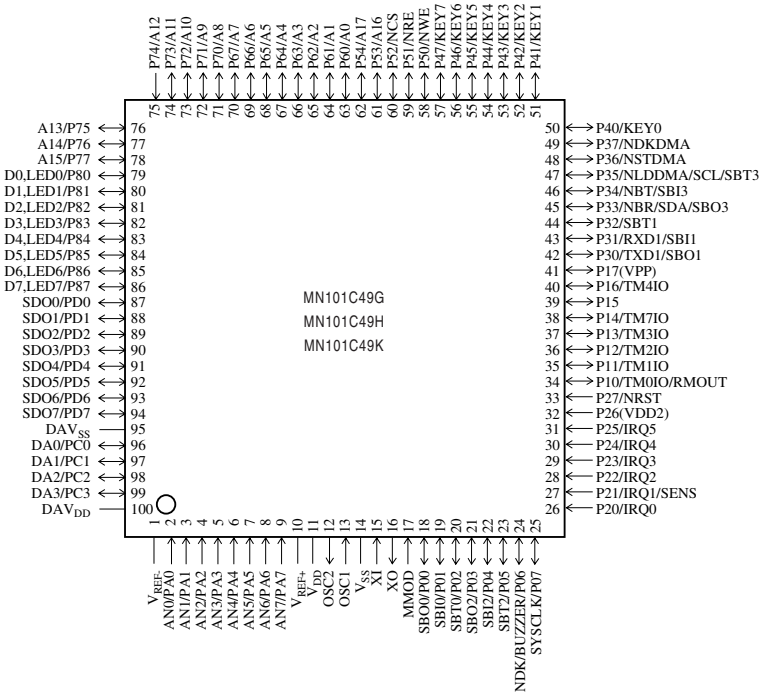

QFP100-P-1818B *Lead-free

LQFP100-P-1414 *Lead-free

( ) : Flash memory built-in type.

www.DataSheet4U.com

www.DataSheet4U.com

Support Tool

In-circuit Emulator	PX-ICE101C / D + PX-PRB101C49-QFP100-P-1818B PX-ICE101C / D + PX-PRB101C49-LQFP100-P-1414	
EPROM Built-in Type	Type	MN101CP49K
	ROM (× 8-bit)	224 K
	RAM (× 8-bit)	10 K
	Minimum instruction execution time	Standard: 0.10 µs (at 4.5 V to 5.5 V, 20 MHz) 0.25 µs (at 2.7 V to 5.5 V, 8.39 MHz) Double speed: 0.12 µs (at 4.5 V to 5.5 V, 8.39 MHz) 0.25 µs (at 3.0 V to 5.5 V, 4 MHz)
	Package	QFP100-P-1818B *Lead-free, LQFP100-P-1414 *Lead-free
Flash Memory Built-in Type	Type	MN101CF49K
	ROM (× 8-bit)	224 K
	RAM (× 8-bit)	10 K
	Minimum instruction execution time	Standard: 0.10 µs (at 4.5 V to 5.5 V, 20 MHz) Double speed: 0.12 µs (at 4.5 V to 5.5 V, 8.39 MHz)
	Package	QFP100-P-1818B *Lead-free, LQFP100-P-1414 *Lead-free

www.DataSheet4U.com

www.DataSheet4U.com

❑ MN101C77A, MN101C77C, MN101C77D, MN101C77F

Type	MN101C77A	MN101C77C	MN101C77D	MN101C77F (under plannning)
ROM (×8-bit)	32 K	48 K	64 K	96 K
RAM (×8-bit)	1.5 K	3 K	6 K	6 K
Package	LQFP064-P-1414 *Lead-free	LQFP064-P-1414 *Lead-free TQFP064-P-1010C *Lead-free	LQFP064-P-1414 *Lead-free	LQFP064-P-1414 *Lead-free

Minimum Instruction Execution Time

Standard: 0.1 µs (at 2.5 V to 3.6 V, 20 MHz)*
0.2 µs (at 2.1 V to 3.6 V, 10 MHz)*
0.5 µs (at 1.8 V to 3.6 V, 4 MHz)*
62.5 µs (at 1.8 V to 3.6 V, 32 kHz)*
Double speed: 0.119 µs (at 2.5 V to 3.6 V, 8.39 MHz)*
* The operation guarantee range for flash memory built-in type is 2.7 V to 3.6 V.

Interrupts

• RESET • Watchdog • External 0 • External 1 • External 2 • External 3 • External 4
• Timer 0 • Timer 1 • Timer 4 • Timer 5 • Timer 6 • Time base
• Serial 0 reception • Serial 0 transmission • Serial 1 reception • Serial 1 transmission • Serial 3
• Serial 4 • Automatic transfer finish • A/D conversion finish • Timer 7 (2 systems) • Key interrupts (8 lines)

Timer Counter

Timer counter 0 : 8-bit × 1
(square-wave/8-bit PWM output, event count, generation of remote control carrier, pulse width measurement)
Clock source ····· 1/2, 1/4 of system clock frequency; 1/1, 1/4, 1/16, 1/32, 1/64 of OSC oscillation clock frequency; 1/1 of XI oscillation clock frequency; external clock input
Interrupt source ····· coincidence with compare register 0

Timer counter 1 : 8-bit × 1 (square-wave output, event count, synchronous output event)
Clock source ····· 1/2, 1/8 of system clock frequency; 1/1, 1/4, 1/16, 1/64, 1/128 of OSC oscillation clock frequency; 1/1 of XI oscillation clock frequency; external clock input
Interrupt source ····· coincidence with compare register 1

Timer counter 0, 1 can be cascade-connected.

Timer counter 4 : 8-bit × 1
(square-wave/8-bit PWM output, event count, pulse width measurement, serial 1 baud rate timer)
Clock source ····· 1/2, 1/4 of system clock frequency; 1/1, 1/4, 1/16, 1/32, 1/64 of OSC oscillation clock frequency; 1/1 of XI oscillation clock frequency; 1/1 of external clock input frequency
Interrupt source ····· coincidence with compare register 4

Timer counter 5 : 8-bit × 1
(square-wave/8-bit PWM output, event count, pulse width measurement, serial 0 baud rate timer)
Clock source ····· 1/2, 1/4 of system clock frequency; 1/1, 1/4, 1/16, 1/32, 1/64 of OSC oscillation clock frequency; 1/1 of XI oscillation clock frequency; 1/1 of external clock input frequency
Interrupt source ····· coincidence with compare register 5

www.DataSheet4U.com

www.DataSheet4U.com

Timer Counter (Continue)			Timer counter 6 : 8-bit freerun timer Clock source ····· 1/1 of system clock frequency; 1/1, 1/4096, 1/8192 of OSC oscillation clock frequency; 1/1, 1/4096, 1/8192 of XI oscillation clock frequency Interrupt source ····· coincidence with compare register 6 Timer counter 7 : 16-bit × 1 (square-wave/16-bit PWM output, cycle / duty continuous variable, event count, synchronous output evevt, pulse width measurement, input capture) Clock source ····· 1/1, 1/2, 1/4, 1/16 of system clock frequency; 1/1, 1/2, 1/4, 1/16 of OSC oscillation clock frequency; 1/1, 1/2, 1/4, 1/16 of external clock input frequency Interrupt source ····· coincidence with compare register 7 (2 lines) Time base timer (one-minute count setting) Clock source ····· 1/1 of OSC oscillation clock frequency; 1/1 of XI oscillation clock frequency Interrupt source ····· 1/128, 1/256, 1/512, 1/1024, 1/8192, 1/32768 of clock source frequency Watchdog timer Interrupt source ····· 1/65536, 1/262144, 1/1048576 of system clock frequency
DMA Controller (Automatic Data Transfer)			Max. Transfer cycles : 255 Starting factor : external request, various types of interrupt, software Transfer mode : 1-byte transfer, word transfer, burst transfer
Serial Interface			Serial 0 : synchronous type / UART (full-duplex) × 1 Clock source ····· 1/2, 1/4 of system clock frequency; pulse output of timer counter 5; 1/2, 1/4, 1/16, 1/64 of OSC oscillation clock frequency Serial 1 : synchronous type / UART (full-duplex) × 1 Clock source ····· 1/2, 1/4 of system clock frequency; pulse output of timer counter 4; 1/2, 1/4, 1/16, 1/64 of OSC oscillation clock frequency Serial 3 : synchronous type/single-master I^2C × 1 Clock source ····· 1/2, 1/4 of system clock frequency; pulse output of timer counter 3; 1/2, 1/4, 1/16, 1/32 of OSC oscillation clock frequency Serial 4 : I^2C slave × 1 Applicable for I^2C high-speed transfer mode, 7 bit/10bit address setting, general call
I/O Pins	**I/O**	53	• Common use • Specified pull-up resistor available • Input/output selectable (bit unit)
A/D Inputs			10-bit × 7-ch. (with S/H)
D/A Outputs			8-bit × 2-ch. (Serves as AD pin, as well)
Special Ports			Buzzer output, remote control carrier signal output, high-current drive port
ROM Correction			Correcting address designation : up to 3 addresses possible

See the next page for electrical characteristics, pin assignment and support tool.

www.DataSheet4U.com

www.DataSheet4U.com

Electrical Characteristics

Supply current

Parameter	Symbol	Condition	Limit			Unit
			min	typ	max	
Operating supply current	IDD1	fosc = 20 MHz, VDD = 3.3 V, (fs = fosc/2)		6	12	mA
	IDD2	fosc = 8.39 MHz, VDD = 3.3 V, (fs = fosc/2)		3	6	mA
	IDD3	fx = 32.768 kHz, VDD = 3.3 V, (fs = fx/2)			40	µA
Supply current at HALT	IDD4	fx = 32.768 kHz, VDD = 3.3 V, Ta = 25°C		5	10	µA
	IDD5	fx = 32.768 kHz, VDD = 3.3 V			40	µA
Supply current at STOP	IDD6	VDD = 3.3 V, Ta = 25°C		0	2	µA
	IDD7	VDD = 3.3 V, Ta = 85°C			30	µA

Ta = −40°C to +85°C, VDD = 1.8 V to 3.6 V, VSS = 0 V

Pin Assignment

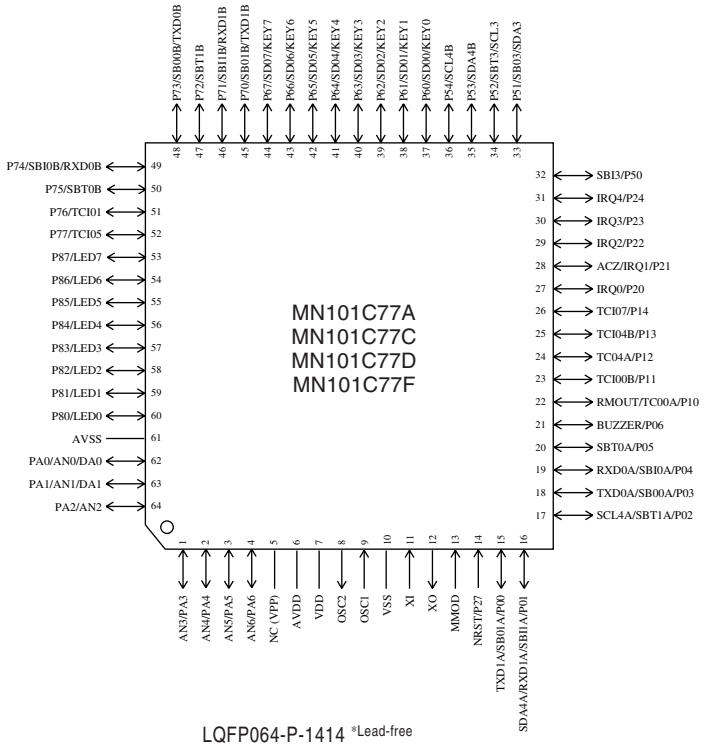

LQFP064-P-1414 *Lead-free

TQFP064-P-1010C *Lead-free [MN101C77C]

NC serves as the VPP pin in the MN101CF77G, and cannot be used as a user pin.

www.DataSheet4U.com

www.DataSheet4U.com

Support Tool

In-circuit Emulator	PX-ICE101C/D;PX-PRB101C77-TQFP064-P1010C PX-ICE101C/D;PX-PRB101C77-LQFP064-P1414	
Flash Memory Built-in Type	Type	MN101CF77G
	ROM (× 8-bit)	128 K
	RAM (× 8-bit)	6 K
	Minimum instruction execution time	Standard: 0.1 µs (at 2.7 V to 3.6 V, 20 MHz)
	Package	LQFP064-P-1414 *Lead-free TQFP064-P-1010C *Lead-free

www.DataSheet4U.com

www.DataSheet4U.com

❑ MN101E01J, MN101E01K, MN101E01L, MN101E01M

Type	MN101E01J	MN101E01K	MN101E01L	MN101E01M
ROM (×8-bit) External memory can be expanded	192 K	256 K	320 K	384 K
RAM (×8-bit) External memory can be expanded	10 K	10 K	14 K	20 K
Package	QFP100-P-1818B *Lead-free	QFP100-P-1818B *Lead-free	QFP100-P-1818B *Lead-free LQFP100-P-1414 *Lead-free	QFP100-P-1818B *Lead-free LQFP100-P-1414 *Lead-free

Minimum Instruction Execution Time

Standard: 0.0625 µs (at 3.0 V to 3.6 V, 32 MHz)
0.1 µs (at 3.0 V to 3.6 V, 20 MHz)
62.5 µs (at 3.0 V to 3.6 V, 32 kHz)
Double speed: 0.10 µs (at 3.0 V to 3.6 V, 10 MHz)

Interrupts

• RESET • Watchdog • External 0 • External 1 • External 2 • External 3 • External 4 • External 5 • Timer 0 • Timer 1 • Timer 2 • Timer 3 • Timer 4 • Timer 5 • Timer 6 • Timer 7 (2 systems) • Time base • Serial 0 (2 systems) • Serial 1 (2 systems) • Serial 2 • Serial 3 • Serial 4 (2 systems) • Automatic transfer finish • A/D conversion finish • Key interrupts (8 lines)

Timer Counter

Timer counter 0 : 8-bit × 1
(square-wave/8-bit PWM output, event count, generation of remote control carrier, pulse width measurement, generation of real time)
Clock source ····· 1/2, 1/4 of system clock frequency; 1/1, 1/4, 1/16, 1/32, 1/64 of OSC oscillation clock frequency; 1/1 of XI oscillation clock frequency; external clock input
Interrupt source ····· coincidence with compare register 0

Timer counter 1 : 8-bit × 1 (square-wave output, event count, synchronous output event)
Clock source ····· 1/2, 1/8 of system clock frequency; 1/1, 1/4, 1/16, 1/64, 1/128 of OSC oscillation clock frequency; 1/1 of XI oscillation clock frequency; external clock input
Interrupt source ····· coincidence with compare register 1

Timer counter 0, 1 can be cascade-connected.

Timer counter 2 : 8-bit × 1 (square-wave/8-bit PWM output, event count, synchronous output event, pulse width measurement generation of real time, serial baud rate timer)
Clock source ····· 1/2, 1/4 of system clock frequency; 1/1, 1/4, 1/16, 1/32, 1/64 of OSC oscillation clock frequency; 1/1 of XI oscillation clock frequency; external clock input
Interrupt source ····· coincidence with compare register 2

Timer counter 3 : 8-bit × 1 (square-wave output, event count, generation of remote control carrier, serial baud rate timer)
Clock source ····· 1/2, 1/8 of system clock frequency; 1/1, 1/4, 1/16, 1/64, 1/128 of OSC oscillation clock frequency; 1/1 of XI oscillation clock frequency; external clock input
Interrupt source ····· coincidence with compare register 3

Timer counter 2, 3 can be cascade-connected.

Timer counter 4 : 8-bit × 1
(square-wave/8-bit PWM output, event count, pulse width measurement, serial baud rate timer)
Clock source ····· 1/2, 1/4 of system clock frequency; 1/1, 1/4, 1/16, 1/32, 1/64 of OSC oscillation clock frequency; 1/1 of XI oscillation clock frequency; external clock input frequency
Interrupt source ····· coincidence with compare register 4

Timer counter 5 : 8-bit × 1 (square-wave output, event count, serial baud rate timer)
Clock source ····· 1/2, 1/4 of system clock frequency; 1/1, 1/4, 1/16, 1/64, 1/128 of OSC oscillation clock frequency; 1/1 of XI oscillation clock frequency; external clock input
Interrupt source ····· coincidence with compare register 5

www.DataSheet4U.com

www.DataSheet4U.com

Timer Counter (Continue)	Timer counter 4, 5 can be cascade-connected. Timer counter 6 : 8-bit freerun timer Clock source ····· 1/1 of system clock frequency; 1/1, 1/4096, 1/8192 of OSC oscillation clock frequency; 1/1, 1/4096, 1/8192 of XI oscillation clock frequency Interrupt source ····· coincidence with compare register 6 Timer counter 7 : 16-bit × 1 (square-wave/16-bit PWM output, cycle / duty continuous variable, event count, synchronous output evevt, pulse width measurement, input capture) Clock source ····· 1/1, 1/2, 1/4, 1/16 of system clock frequency; 1/1, 1/2, 1/4, 1/16 of OSC oscillation clock frequency; 1/1, 1/2, 1/4, 1/16 of external clock input frequency Interrupt source ····· coincidence with compare register 7 (2 lines) Time base timer (one-minute count setting) Clock source ····· 1/1 of OSC oscillation clock frequency; 1/1 of XI oscillation clock frequency Interrupt source ····· 1/128, 1/256, 1/512, 1/1024, 1/8192, 1/32768 of clock source frequency Watchdog timer Interrupt source ····· 1/65536, 1/262144, 1/1048576, 1/4194304 of system clock frequency
DMA Controller (Automatic Data Transfer)	Max. Transfer cycles : 255 Starting factor : external request, various types of interrupt, software Transfer mode : 1-byte transfer, word transfer, burst transfer
Serial Interface	Serial 0 : synchronous type/UART (full-duplex) × 1 Clock source ····· 1/2, 1/4 of system clock frequency; pulse output of timer counter 2, 4; 1/2, 1/4, 1/16, 1/64 of OSC oscillation clock frequency Serial 1 : synchronous type/UART (full-duplex) × 1 Clock source ····· 1/2, 1/4 of system clock frequency; pulse output of timer counter 4, 5; 1/2, 1/4, 1/8, 1/16, 1/64 of OSC oscillation clock frequency Serial 2 : synchronous type/single-master I^2C× 1 Clock source ····· 1/2, 1/4 of system clock frequency; pulse output of timer counter 2, 3; 1/2, 1/4, 1/8, 1/16, 1/32, 1/64, 1/128 of OSC oscillation clock frequency Serial 3 : synchronous type/single-master I^2C × 1 Clock source ····· 1/2, 1/4 of system clock frequency; pulse output of timer counter 3, 5; 1/2, 1/4, 1/8, 1/16, 1/32, 1/64, 1/128 of OSC oscillation clock frequency Serial 4 : synchronous type/UART (full-duplex) × 1 Clock source ····· 1/2, 1/4 of system clock frequency; pulse output of timer counter 2, 5 ; 1/2, 1/4, 1/16, 1/64 of OSC oscillation clock frequency

I/O Pins	**I/O**	34	• (5 V IF port) Common use • Specified pull-up resistor available • Input/output selectable (bit unit)
		50	• (3 V IF port) Common use • Specified pull-up resistor available • Input/output selectable (bit unit)
A/D Inputs		10-bit × 8-ch. (with S/H)	
D/A Outputs		8-bit × 1-ch.	
Special Ports		Buzzer output, remote control carrier signal output, high-current drive port	
ROM Correction		Correcting address designation : up to 3 addresses possible	

See the next page for electrical characteristics, pin assignment and support tool.

www.DataSheet4U.com

Electrical Characteristics

Supply current

Parameter	Symbol	Condition	Limit			Unit
			min	typ	max	
Operating supply current	IDD1	fosc = 4 MHz, VDD = 3 V		11(48)	30(80)	mA
	IDD2	fx = 32 kHz, VDD = 3 V		8(43)	22(75)	mA
	IDD3	fx = 32 kHz, VDD = 3 V, Ta = 25°C		30(60)	120(180)	µA
Supply current at HALT	IDD4	fx = 32 kHz, VDD = 3 V, Ta = −40°C to +85°C		12	30	µA
Supply current at STOP	IDD5	VDD = 3 V, Ta = 25°C		0.3	3.0	µA
	IDD6	VDD = 3 V, Ta = −40°C to +85°C			80	µA

( ) : Flash memory built-in type.

Pin Assignment

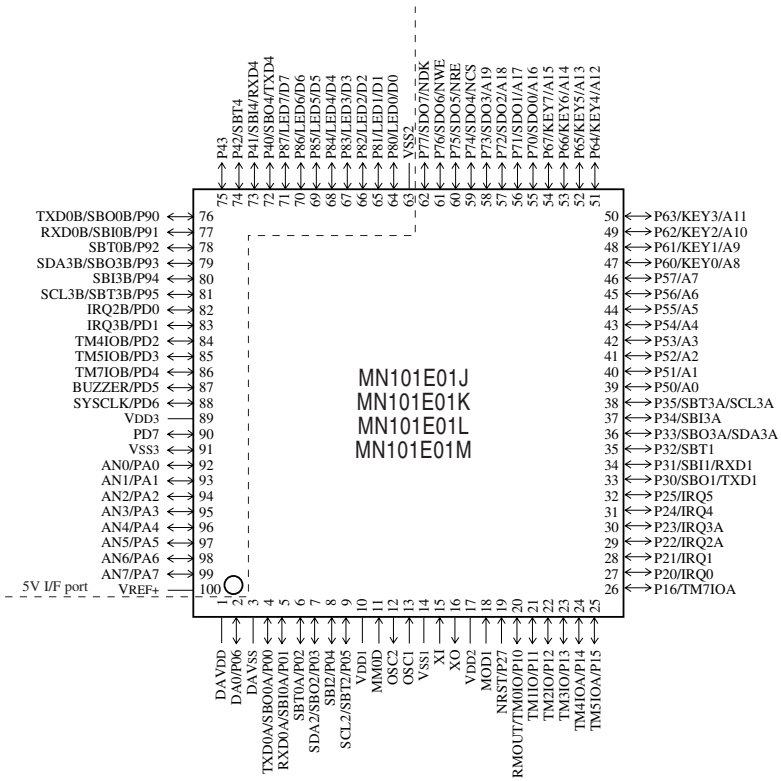

QFP100-P-1818B *Lead-free

LQFP100-P-1414 *Lead-free

www.DataSheet4U.com

www.DataSheet4U.com

Support Tool

In-circuit Emulator

PX-ICE101E9+PX-PRB101E01-QFP100-P-1818B
PX-ICE101E9+PX-PRB101E01-QFP100-P-1414

Flash Memory Built-in Type

Type	MN101EF01M
ROM (× 8-bit)	384 K
RAM (× 8-bit)	24 K
Minimum instruction execution time	Standard: 0.0625 µs (at 3.0 V to 3.6 V, 32 MHz) Double speed: 0.10 µs (at 3.0 V to 3.6 V, 10 MHz)
Package	QFP100-P-1818B *Lead-free, LQFP100-P-1414 *Lead-free

www.DataSheet4U.com

www.DataSheet4U.com

❑ MN101C46F

Type			MN101C46F
ROM (×8-bit)			96 K
RAM (×8-bit)			3 K
Package (Conventional Package)			SDIP042-P-0600C *Lead-free (SDIP042-P-0600)
Minimum Instruction Execution Time			279 ns (at 3.0 V to 3.6 V, 14.32 MHz)
Interrupts			External (6 lines) Internal (12 lines) : Timer × 3, A/D, OSD, I²C, Caption × 4, Remote control, Watchdog
Timer Counter			8-bit timer × 3 Watchdog timer: system clock fs $1/2^{16}$, $1/2^{18}$, $1/2^{20}$ triple selection
Serial Interface			I²C × 1: for multimaster mode, bus line (output) has 2 systems
Caption			• Built-in sync separator × 2
I/O Pins	**I/O**	35	• Common use
A/D Inputs			5-bit × 8-ch. (with S/H)
PWM			8-bit × 6-ch. , 14-bit × 1-ch.
Special Ports			Remote control reception
CRTC			1-layer display (graphics, characters)
Notes			Remote control input discriminant circuit built-in

www.DataSheet4U.com

www.DataSheet4U.com

Pin Assignment

( ) : Conventional Package

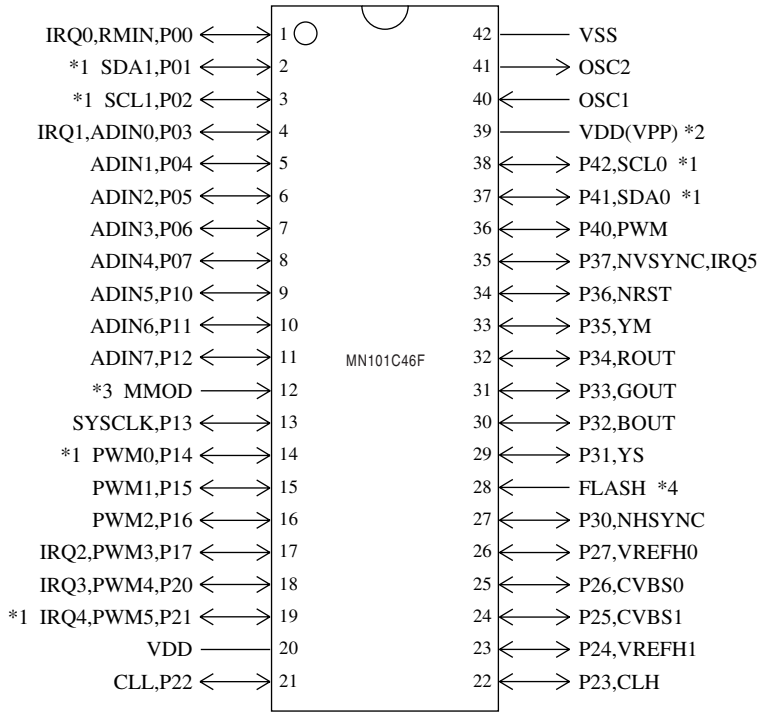

SDIP042-P-0600C *Lead-free

(SDIP042-P-0600)

*1: 5 V dielectric Nch open drain output pin

*2: MN101C46F (VDD), MN101CF46F (VPP)

*3: MMOD = H (fixed) (Set the test mode pin to the normal mode.)

*4: FLASH = L (fixed) (Set the flash mode pin to the normal mode.)

Support Tool

In-circuit Emulator	PX-ICE101C/D+PX-PRB101C46-SDIP042-P-0600-M	
EPROM Built-in Type	Type	MN101CF46F [ES (Engineering Sample) available]
	ROM (× 8-bit)	96 K
	RAM (× 8-bit)	3 K
	Minimum instruction execution time	279 ns (at 3.0 V to 3.6 V, 14.32 MHz)
	Package (Conventional Package)	SDIP042-P-0600C *Lead-free (SDIP042-P-0600)

www.DataSheet4U.com

www.DataSheet4U.com

❑ MN101C47C, MN101C47D

Type		MN101C47C	MN101C47D
ROM (×8-bit)		48 K	64 K
RAM (×8-bit)		1.5 K	2 K
Package (Conventional Package)		SDIP042-P-0600C *Lead-free, LQFP064-P-1414 *Lead-free (SDIP042-P-0600)	
Minimum Instruction Execution Time		279 ns (at 3.0 V to 3.6 V, 14.32 MHz)	
Interrupts		External (6 lines) Internal (8 lines) : Timer × 3, A/D, OSD, I²C, Remote control, Watchdog	
Timer Counter		8-bit timer × 3 Watchdog timer: system clock fs 1/2¹⁶, 1/2¹⁸, 1/2²⁰ triple selection	
Serial Interface		I²C × 1: for multimaster mode, bus line (output) has 2 systems	
Caption		• Built-in sync separator × 2	
I/O Pins	I/O	35	• Common use: 29
A/D Inputs		5-bit × 8-ch. (with S/H)	
PWM		8-bit × 6-ch. , 14-bit × 1-ch.	
Special Ports		Remote control reception	
CRTC		1-layer display (graphics, characters)	
Notes		Remote control input discriminant circuit built-in	

Support Tool

In-circuit Emulator	PX-ICE101C/D+PX-PRB101C47-SDIP046-P-0600-M (under development)	
EPROM Built-in Type	Type	MN101CF46F (under development)
	ROM (× 8-bit)	96 K
	RAM (× 8-bit)	3 K
	Minimum instruction execution time	279 ns (at 3.0 V to 3.6 V, 14.32 MHz)
	Package (Conventional Package)	SDIP042-P-0600C *Lead-free, LQFP064-P-1414 *Lead-free (SDIP042-P-0600)

www.DataSheet4U.com

www.DataSheet4U.com

Pin Assignment

( ) : Conventional Package

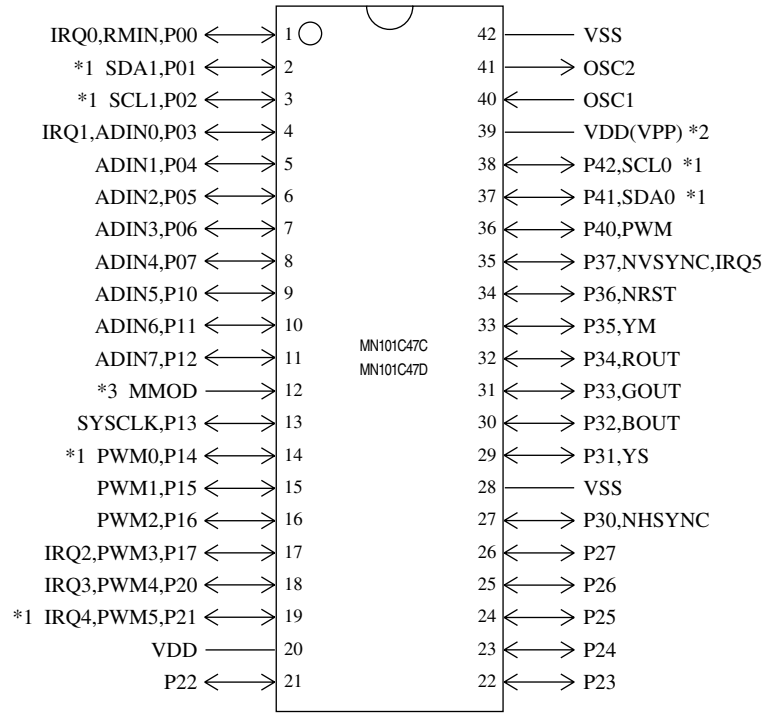

SDIP042-P-0600C *Lead-free

(SDIP042-P-0600)

∗1: 5 V dielectric Nch open drain output pin

∗2: Mask ROM = VDD, Flash memory built-in type = VPP

∗3: MMOD = H (fixed) (Set the test mode pin to the normal mode.)

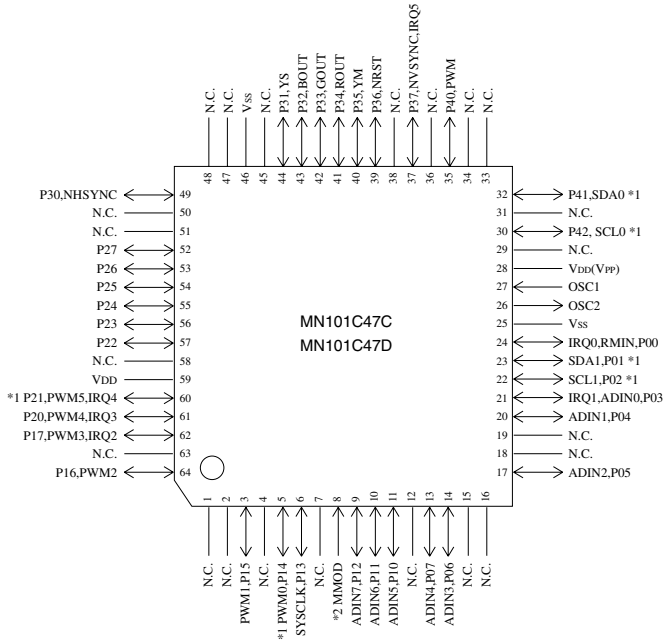

LQFP064-P-1414 *Lead-free

∗1: 5 V dielectric Nch open drain output pin

∗2: MMOD = H (fixed)

www.DataSheet4U.com

www.DataSheet4U.com

❑ MN101E02H

Type		MN101E02H	
ROM (×16-bit)		160 K	
RAM (×16-bit)		16 K	
Package		QFP084-P-1818E *Lead-free	
Minimum Instruction Execution Time		100 ns (at 3.135 V to 3.465 V, normal-mode)	
Interrupts		External (5 lines) Internal (15 lines) : Timer × 4, A/D × 1, RESET × 1, OSD × 1, Serial × 2, Teletext decoder × 2, I^2C × 1, Caption × 1, Remote control × 1, HSYNC× 1, VSYNC× 1	
Timer Counter		8-bit timer × 4 Watchdog timer: Time-out period is selectable.	
Serial Interface		I^2C × 1: for multimaster mode, bus line (output) has 2 systems Sync serial / UART × 1	
Caption/Teletext Decoder		• Built-in sync separator × 1	
I/O Pins	**I/O**	35	• Common use
A/D Inputs		10-bit × 8-ch. (with S/H)	
PWM		8-bit × 4-ch. , 14-bit × 1-ch.	
Special Ports		Remote control reception	
CRTC		1-layer display (graphics, characters, splits)	
Notes		Remote control input discriminant circuit built-in, build-in NTSC/PAL (BGHIDK, M, N)/SECAM/NTSC443 video signal processing circuit, built-in 3-line comb filter (NTSC) built-in adaptive 2-line comb filter (PAL), built-in teletext decoder	

www.DataSheet4U.com

www.DataSheet4U.com

Pin Assignment

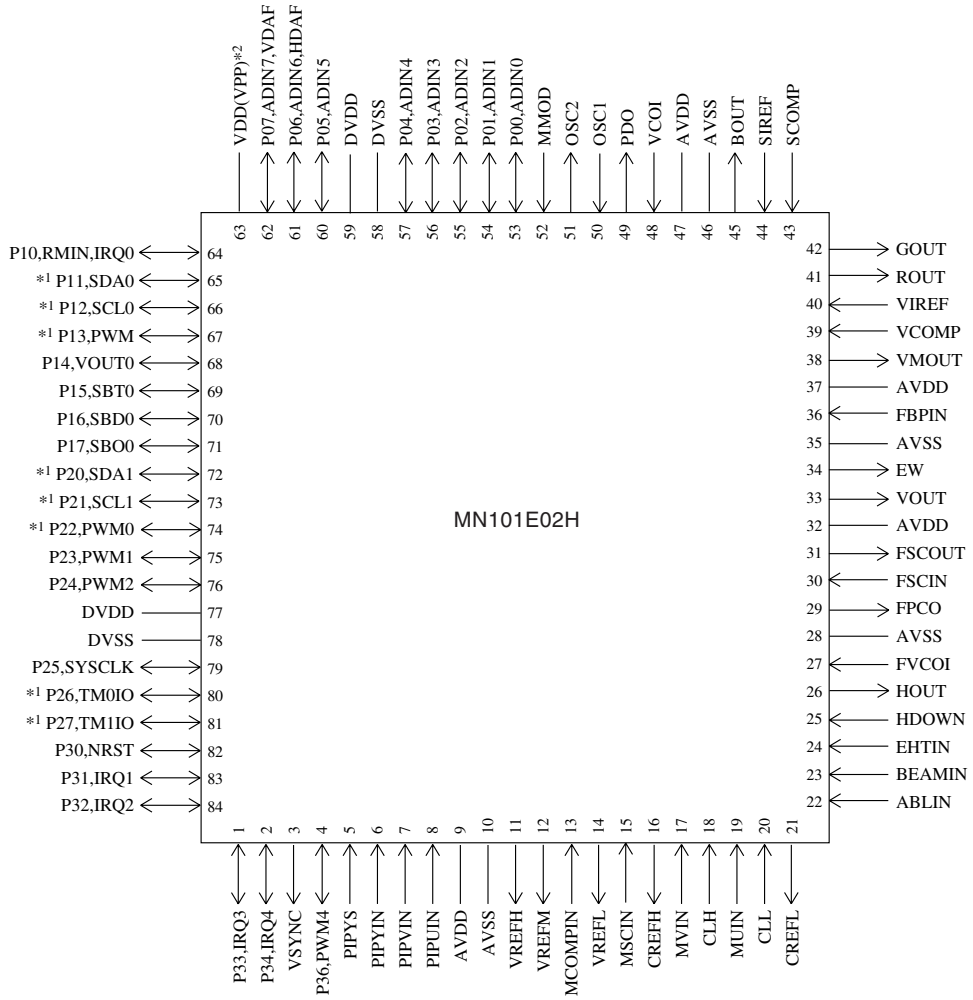

QFP084-P-1818E *Lead-free

*1: 5V dielectric Nch open drain output pin

*2: Mask ROM=VDD, Flash Memory built-in type=VPP

Support Tool

In-circuit Emulator	PX-PAC101E02-4W9J	
Flash Memory Built-in Type	Type	MN101EF02K [ES (Engineering Sample) available]
	ROM (× 8-bit)	160 K
	RAM (× 8-bit)	16 K
	Minimum instruction execution time	100 ns
	Package	QFP084-P-1818E *Lead-free

www.DataSheet4U.com

www.DataSheet4U.com

❑ MN101E04G

Type		MN101E04G	
ROM (×16-bit)		128 K	
RAM (×16-bit)		4 K	
Package		QFP084-P-1818E *Lead-free	
Minimum Instruction Execution Time		100 ns (at 3.135 V to 3.465 V, normal-mode)	
Interrupts		External (5 lines) Internal (13 lines) : Timer × 4, A/D × 1, RESET × 1, OSD × 1, Serial × 2, I^2C × 1, Caption × 1, Remote control × 1, HSYNC× 1, VSYNC× 1	
Timer Counter		8-bit timer × 4 Watchdog timer: Time-out period is selectable.	
Serial Interface		I^2C × 1: for multimaster mode, bus line (output) has 2 systems Sync serial / UART × 1	
Caption/Teletext Decoder		• Built-in sync separator × 1	
I/O Pins	**I/O**	30	• Common use
A/D Inputs		10-bit × 8-ch. (with S/H)	
PWM		8-bit × 4-ch. , 14-bit × 1-ch.	
Special Ports		Remote control reception	
CRTC		1-layer display (graphics, characters, splits)	
Notes		Remote control input discriminant circuit built-in, build-in NTSC/PAL/SECAM video signal processing circuit, built-in 3-line comb filter (NTSC) built-in adaptive 2-line comb filter (PAL)	

www.DataSheet4U.com

www.DataSheet4U.com

Pin Assignment

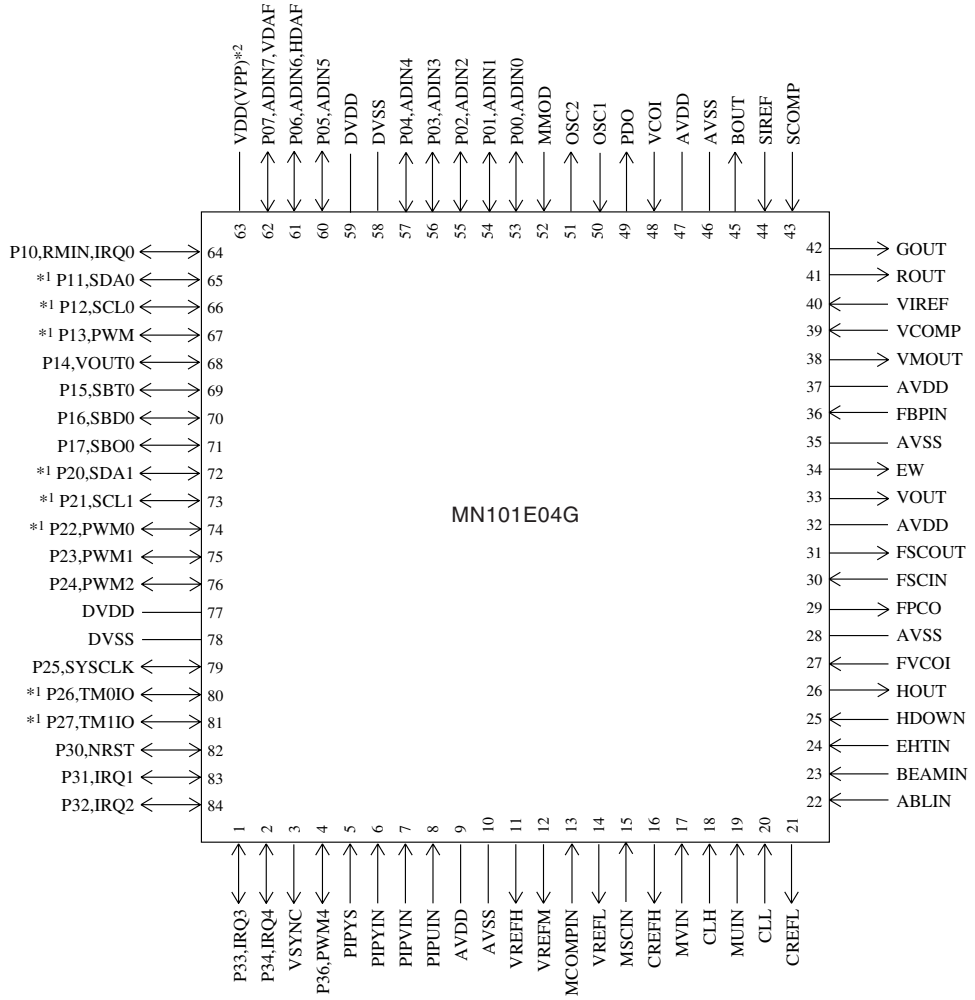

QFP084-P-1818E *Lead-free

*1: 5V dielectric Nch open drain output pin

*2: Mask ROM=VDD, Flash Memory built-in type=VPP

Support Tool

In-circuit Emulator	PX-PAC101E02-4W9J	
Flash Memory Built-in Type	Type	MN101EF04G [ES (Engineering Sample) available]
	ROM (× 8-bit)	128 K
	RAM (× 8-bit)	4 K
	Minimum instruction execution time	100 ns
	Package	QFP084-P-1818E *Lead-free

www.DataSheet4U.com

❑ MN101E11G

Type		MN101E11G	
ROM (×16-bit)		128 K	
RAM (×16-bit)		4 K	
Package		QFP084-P-1818E *Lead-free	
Minimum Instruction Execution Time		100 ns (at 3.135 V to 3.465 V, normal-mode)	
Interrupts		External (5 lines) Internal (13 lines) : Timer × 4, A/D × 1, RESET × 1, OSD × 1, Serial × 2, I^2C × 1, Caption × 1, Remote control × 1, HSYNC× 1, VSYNC× 1	
Timer Counter		8-bit timer × 4 Watchdog timer: Time-out period is selectable.	
Serial Interface		I^2C × 1: for multimaster mode, bus line (output) has 2 systems Sync serial / UART × 1	
Caption/Teletext Decoder		• Built-in sync separator × 1	
I/O Pins	**I/O**	30	• Common use
A/D Inputs		10-bit × 8-ch. (with S/H)	
PWM		8-bit × 4-ch. , 14-bit × 1-ch.	
Special Ports		Remote control reception	
CRTC		1-layer display (graphics, characters, splits)	
Notes		Remote control input discriminant circuit built-in, build-in NTSC video signal processing circuit, built-in 3-line comb filter PinP available	

www.DataSheet4U.com

www.DataSheet4U.com

Pin Assignment

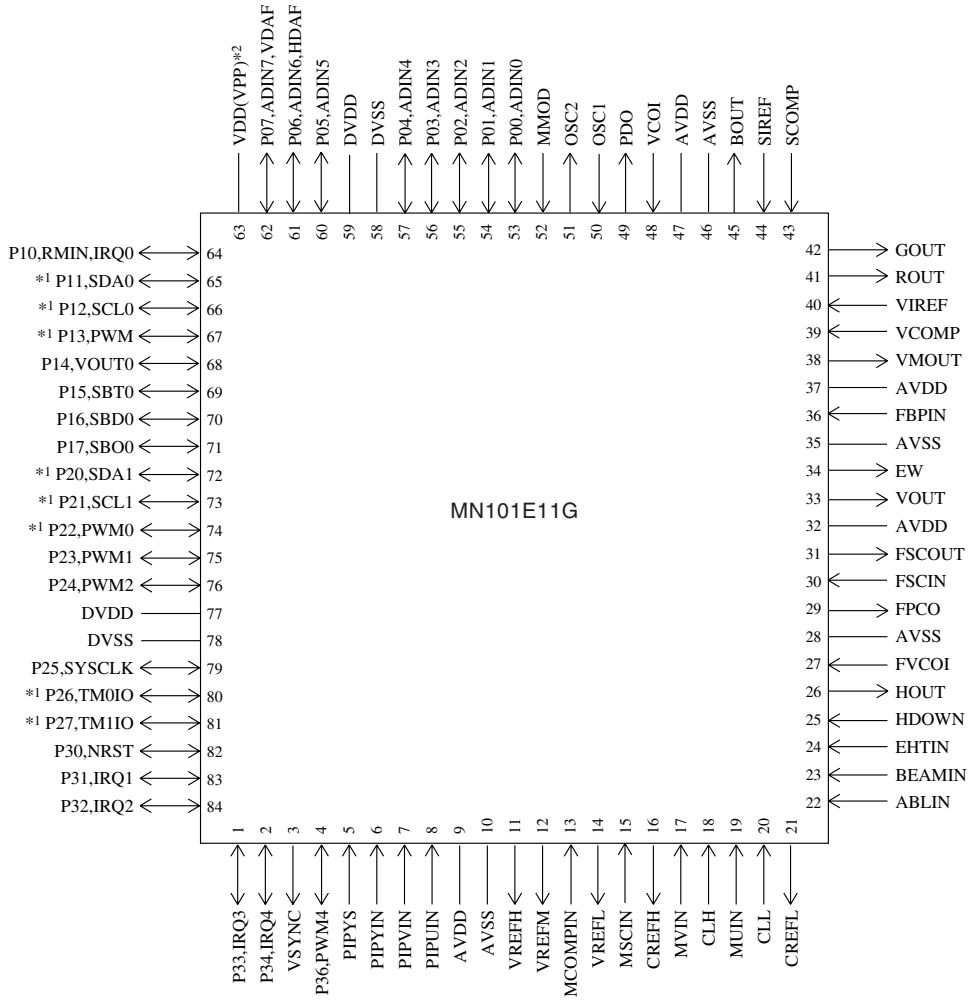

QFP084-P-1818E *Lead-free

*1: 5V dielectric Nch open drain output pin

*2: Mask ROM=VDD, Flash Memory built-in type=VPP

Support Tool

In-circuit Emulator	PX-PAC101E02-4W9J	
Flash Memory Built-in Type	Type	MN101EF11G
	ROM (× 8-bit)	128 K
	RAM (× 8-bit)	4 K
	Minimum instruction execution time	100 ns
	Package	QFP084-P-1818E *Lead-free

www.DataSheet4U.com

www.DataSheet4U.com

❑ MN101E13G

Type			MN101E13G
ROM (×16-bit)			128 K
RAM (×16-bit)			4 K
Package			QFP084-P-1818E *Lead-free
Minimum Instruction Execution Time			100 ns (at 3.135 V to 3.465 V, normal-mode)
Interrupts			External (7 lines) Internal (13 lines) : Timer × 4, A/D × 1, RESET × 1, OSD × 1, Serial × 2, I^2C × 1, Caption × 1, Remote control × 1, HSYNC× 1, VSYNC× 1
Timer Counter			8-bit timer × 4 Watchdog timer: Time-out period is selectable.
Serial Interface			I^2C × 1: for multimaster mode, bus line (output) has 2 systems Sync serial / UART × 1
Caption/Teletext Decoder			• Built-in sync separator × 1
I/O Pins	**I/O**	35	• Common use
A/D Inputs			10-bit × 8-ch. (with S/H)
PWM			8-bit × 6-ch. , 14-bit × 1-ch.
Special Ports			Remote control reception
CRTC			1-layer display (graphics, characters, splits)
Notes			Remote control input discriminant circuit built-in, build-in NTSC video signal processing circuit, built-in 3-line comb filter

www.DataSheet4U.com

www.DataSheet4U.com

Pin Assignment

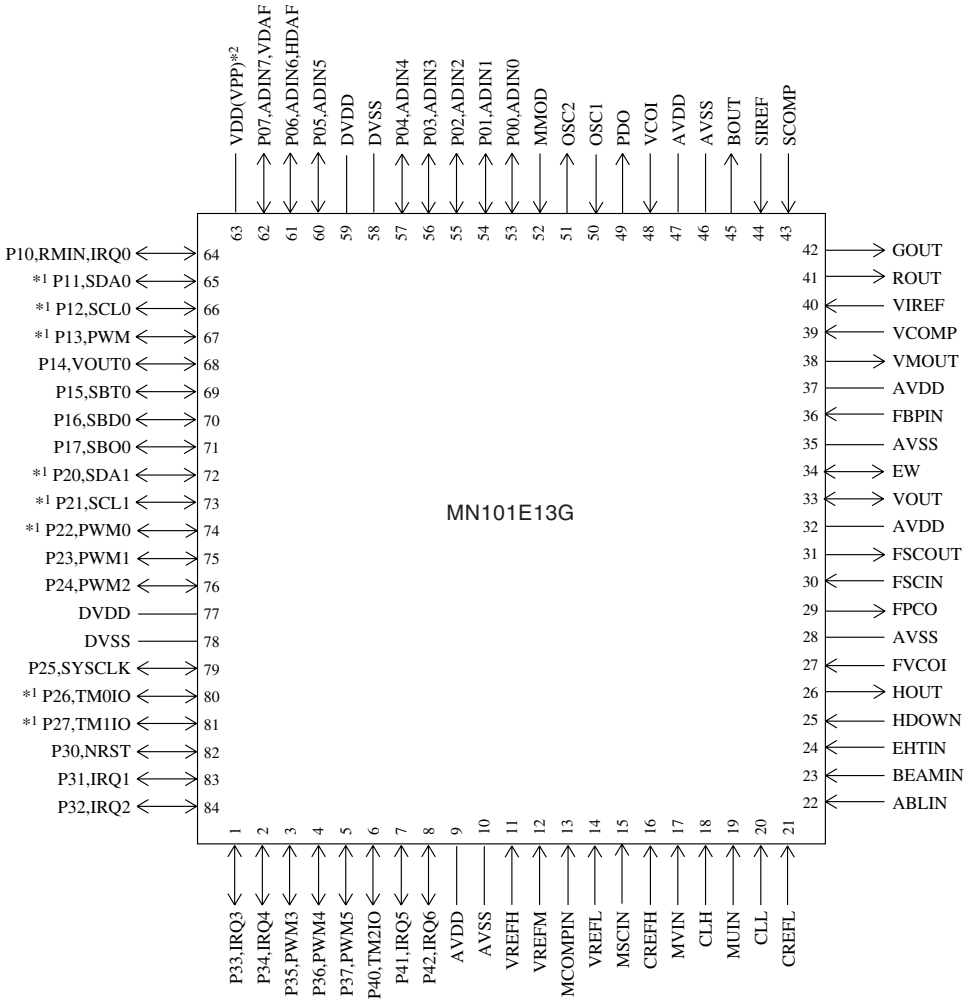

QFP084-P-1818E *Lead-free

*1: 5V dielectric Nch open drain output pin

*2: Mask ROM=VDD, Flash Memory built-in type=VPP

Support Tool

In-circuit Emulator	PX-PAC101E02-4W9J	
Flash Memory Built-in Type	Type	MN101EF13G [ES (Engineering Sample) available]
	ROM (× 8-bit)	128 K
	RAM (× 8-bit)	4 K
	Minimum instruction execution time	100 ns
	Package	QFP084-P-1818E *Lead-free

www.DataSheet4U.com

www.DataSheet4U.com

❑ MN101C93K

Type	MN101C93K (under development)
ROM (×8-bit)	224 K
RAM (×8-bit)	6 K
Package	LQFP100-P-1414 *Lead-free (under development), MLGA100-L-1010 *Lead-free (under planning)
Minimum Instruction Execution Time	0.125 µs (at 3.0 V to 3.6 V, 8 MHz) 62.5 µs (at 3.0 V to 3.6 V, 32 kHz)
Interrupts	• RESET • Watchdog • External 0 • External 1 • External 2 • External 3 • External 4 • External 5 • External 6 (key interrupt dedicated) • Timer 0 • Timer 1 • Timer 2 • Timer 3 • Timer 6 • Time base • Timer 7 (2 systems) • Timer 8 (2 systems) • Serial 0 (2 systems) • Serial 1 (2 systems) • Serial 3 • A/D conversion finish • Automatic transfer finish • USB interrupts
USB Functions	Conforms to USB1.1. USB transceiver built-in Full-speed (12 Mbps) supported. 5 end points (FIFO built-in independently) FIFO size (EP0, 1, 2, 3, 4): 16, 128, 128, 64, 64 bytes • EP0 Control transfer IN/OUT (two ways) • EP1 to EP4 Interrupt/Bulk/Isochronous transfer supported. Settable to IN or OUT. Double Buffering function supported. When the MAXP size is set to a half or less of the MAXFIFO size for each EP, the Double Buffering function is made valid automatically.
Timer Counter	Timer counter 0: 8-bit × 1 (square-wave/8-bit PWM output, event count, generation of remote control carrier, simple pulse width measurement, added pluse (2-bit) system PWM output) (square-wave/PWM output to large current terminal PC3 possible) Clock source ····· 1/2, 1/4 of system clock frequency; 1/1, 1/4, 1/16, 1/32, 1/64 of OSC oscillation clock frequency; 1/1 of XI oscillation clock frequency; external clock input Interrupt source ····· coincidence with compare register 0 Timer counter 1: 8-bit × 1 (square-wave output, event count, serial transfer clock output, synchronous output event) Clock source ····· 1/2, 1/8 of system clock frequency; 1/1, 1/4, 1/16, 1/64, 1/128 of OSC oscillation clock frequency; 1/1 of XI oscillation clock frequency; external clock input Interrupt source ····· coincidence with compare register 1 Timer counter 0, 1 can be cascade-connected. Timer counter 2: 8-bit × 1 (square-wave output, added pluse (2-bit) system PWM output, PWM output, serial transfer clock output, event count, synchronous output event, simple pulse width measurement) (square-wave/PWM output to large current terminal PC5 possible) Clock source ····· 1/2, 1/4 of system clock frequency; 1/1, 1/4, 1/16, 1/32, 1/64 of OSC oscillation clock frequency; 1/1 of XI oscillation clock frequency; external clock input Interrupt source ····· coincidence with compare register 2

www.DataSheet4U.com

www.DataSheet4U.com

Timer Counter (Continue)

Timer counter 3: 8-bit × 1
(square-wave output, event count, generation of remote control carrier, serial transfer clock)
Clock source ····· 1/2, 1/8 of system clock frequency; 1/1, 1/4, 1/16, 1/64, 1/128 of OSC oscillation clock frequency; 1/1 of XI oscillation clock frequency; external clock input
Interrupt source ····· coincidence with compare register 3

Timer counter 2, 3 can be cascade-connected.

Timer counter 6: 8-bit freerun timer
Clock source ····· 1/1 of system clock frequency; 1/1, 1/128, 1/8192 of OSC oscillation clock frequency; 1/1, 1/128, 1/8192 of XI oscillation clock frequency
Interrupt source ····· coincidence with compare register 6

Timer counter 7: 16-bit × 1
(square-wave output, 16-bit PWM output (cycle / duty continuous variable), event count, synchronous output event, pulse width measurement, input capture, real time output control, high performance IGBT output (Cycle/Duty can be changed constantly)) (square-wave/PWM output to large current terminal PC4 possible)
Clock source ····· 1/1, 1/2, 1/4, 1/16 of system clock frequency; 1/1, 1/2, 1/4, 1/16 of OSC oscillation clock frequency; 1/1, 1/2, 1/4, 1/16 of external clock input frequency
Interrupt source ····· coincidence with compare register 7 (2 lines), input capture register

Timer counter 8: 16 bit × 1
(square-wave/16-bit PWM output [duty continuous variable], event count, pulse width measurement, input capture)
(square-wave/PWM output to large current terminal PC6 possible)
Clock source ····· 1/1, 1/2, 1/4, 1/16 of system clock frequency;
1/1, 1/2, 1/4, 1/16 of OSC oscillation clock frequency;
1/1, 1/2, 1/4, 1/16 of external clock input frequency
Interrupt source ····· coincidence with compare register 8 (2 lines), input capture register

Timer counters 7, 8 can be cascade-connected.
(square-wave output, PWM is possible as a 32-bit timer.)

Time base timer (one-minute count setting)
Clock source ····· 1/1 of OSC oscillation clock frequency; 1/1 of XI oscillation clock frequency
Interrupt source ····· 1/128, 1/256, 1/512, 1/1024, 1/4096, 1/8192, 1/16384, 1/32768 of clock source frequency

Watchdog timer
Interrupt source ····· 1/65536, 1/262144, 1/1048576 of system clock frequency

DMA Controller (Automatic Data Transfer)

Max. Transfer cycles 255
Starting factor external request, various types of interrupt, software
Transfer mode 1-byte transfer, word transfer, burst transfer

Serial Interface

Serial 0: synchronous type/UART (full-duplex) × 1
Clock source ····· 1/2, 1/4 of system clock frequency; pulse output of timer counter 1 or 2; 1/2, 1/4, 1/16, 1/64 of OSC oscillation clock frequency, external clock

Serial 1: synchronous type/UART (full-duplex) × 1
Clock source ····· 1/2, 1/4 of system clock frequency; pulse output of timer counter 1 or 2; 1/2, 1/4, 1/16, 1/64 of OSC oscillation clock frequency, external clock

Serial 3: synchronous type/single-master I^2C × 1
Clock source ····· 1/2, 1/4 of system clock frequency; pulse output of timer counter 2 or 3; 1/2, 1/4, 1/16, 1/32 of OSC oscillation clock frequency, external clock

www.DataSheet4U.com

www.DataSheet4U.com

I/O Pins	**I/O**	84	• Common use • Specified pull-up resistor available • Input/output selectable (bit unit)
A/D Inputs		10-bit × 12-ch. (with S/H)	
LCD		47 segments × 4 commons (static, 1/2, 1/3, or 1/4 duty) LCD power supply separated from VDD (usable if VDD = VLCD ≤ 3.6 V) LCD power shunt resistance contained	
Special Ports		USB ports (D+, D−), buzzer output, remote control carrier signal output, high-current drive port, clock output	
ROM Correction		Correcting address designation: up to 7 addresses possible	

Pin Assignment

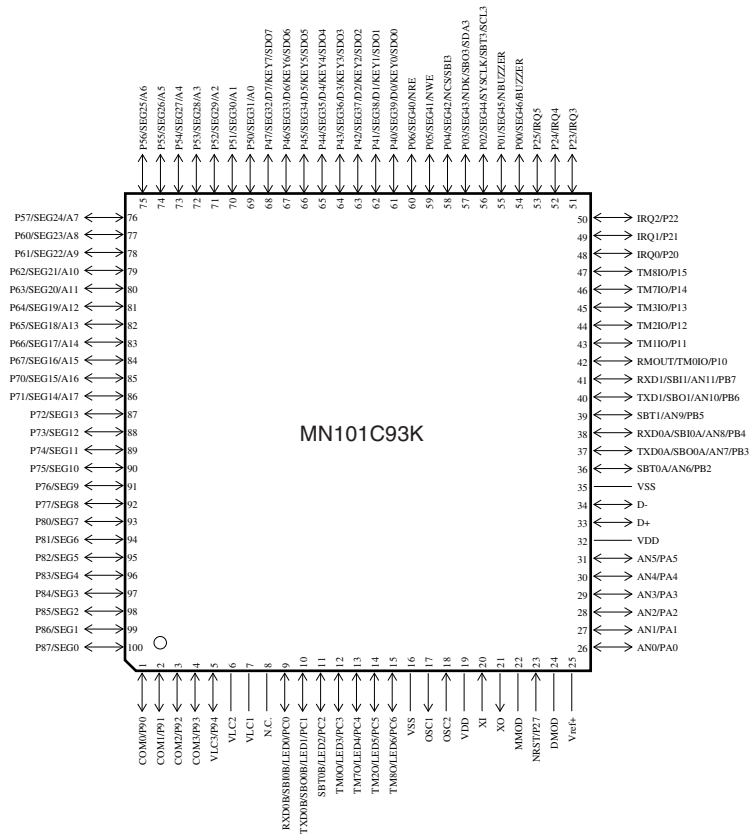

LQFP100-P-1414 *Lead-free

MLGA100-L-1010 *Lead-free

www.DataSheet4U.com

www.DataSheet4U.com

Support Tool

In-circuit Emulator	PX-ICE101C / D + PX-PRB101C93-LQFP100-P-1414-M (under development)	
Flash Memory Built-in Type	Type	MN101CF93K (under development)
	ROM (× 8-bit)	224 K
	RAM (× 8-bit)	6 K
	Minimum instruction execution time	0.167 µs (at 3.0 V to 3.6 V, 6 MHz) 62.5 µs (at 3.0 V to 3.6 V, 32 kHz)
	Package	LQFP100-P-1414 *Lead-free (under development) MLGA100-L-1010 *Lead-free (under planning)

www.DataSheet4U.com

www.DataSheet4U.com

❑ MN101D06F , MN101D06G , MN101D06H

Type	MN101D06F	MN101D06G	MN101D06H
ROM (×8-bit)	96 K	128 K	160 K
RAM (×8-bit)	3 K	4 K	5 K
Package	QFP100-P-1818B *Lead-free		
Minimum Instruction Execution Time	With main clock operated: 0.1397 µs (at 4.0 V to 5.5 V, 14.32 MHz) 71.5 µs (at 3.0 V to 5.5 V fixed to 14.32 MHz internal frequency division) When sub-clock operated: 61 µs (at 2.2 V to 5.5 V, 32.768 kHz)		
Interrupts	• RESET • Runaway • External 0 • External 1 • External 2 • External 3 • External 4 • key input (P50 to 54) • Timer 0 • Timer 1 • Timer 2 • Timer 3 • Timer 4 • Timer 6 • Capstan FG • Control • HSW • Cylinder(Drum) FG • Servo V-sync • Synchronous output • OSD • XDS • Serial 0 • Serial 1 • Serial 2 • A/D (common with PWM 4 reference frequency) • OSD V-sync		

Timer Counter

Timer counter 0: 16-bit × 1
(timer function, clock function [max. 2 s or max. 36 h at cascade-connecting with timer 6])
- Clock source ····· 1/2, (1/4,) 1/8, (1/16) of system clock frequency; overflow of timer counter 6; 1/512 of XI oscillation clock or OSC oscillation clock frequency
- Interrupt source ····· overflow of timer counter 0

Timer counter 1: 16-bit × 1 (timer function, linear timer counter function)
- Clock source ····· 1/2, (1/4,) 1/8, (1/16) of system clock frequency; CTL signal
- Interrupt source ····· overflow of timer counter 1

Timer counter 2: 16-bit × 1 (timer function, input capture, duty judgment of CTL signal(VISS/VASS detection function))
- Clock source ····· 1/2, (1/4,) 1/8, (1/16,) 1/12, (1/24) of system clock frequency
- Interrupt source ····· overflow of timer counter 2; input of CTL specified edge; underflow of timer 2 shift register 4-bit counter; coincidence of timer 2 shift register with timer 2 shift register compare register

Timer counter 3: 16-bit × 1
(timer function, detection of serial indexing, generation of remote control output carrier frequency)
- Clock source ····· 1/2, (1/4,) 1/8, (1/16) of system clock frequency; XI oscillation clock
- Interrupt source ····· overflow of timer counter 3

Timer counter 4: 16-bit × 1 (timer function, event count [P15 input], generation of serial transmission clock)
- Clock source ····· 1/8, (1/16) of system clock frequency; external clock input
- Interrupt source ····· overflow of timer counter 4; coincidence of timer counter 4 with OCR4

Timer counter 5: 19-bit × 1 (watchdog, stable oscillation waiting function)
- Clock source ····· system clock
- Watchdog interrupt source ·· $1/2^{16}$, $1/2^{19}$ of timer counter 5 frequency
- Clear by stable oscillation ·· after 256 counts by timer counter 5 (2^{18} counts of OSC oscillation clock)

Timer counter 6: 16-bit × 1 (clock function [max. 2 s])
- Clock source ····· 1/512 of OSC oscillation clock frequency; XI oscillation clock; 1/4, (1/8,) 1/64, (1/128) of system clock frequency
- Interrupt source ····· $1/2^{13}$, $1/2^{14}$, $1/2^{15}$ overflow of timer counter 6

Timer counter 7: 8-bit × 1 or 4-bit × 2 (timer function, event count)
- Clock source ····· 1/4, (1/8,) 1/16, (1/32) of system clock frequency; external clock input
- Interrupt source ····· overflow of timer counter 7 (although when 4-bit × 2, there is one interrupt vector.)

Serial Interface

Serial 0: 8-bit × 1 (synchronous type/start-stop synchronous type) (transfer direction of MSB/LSB selectable)
- Synchronous type clock source 1/8, 1/16, 1/32, 1/64, 1/128, 1/256 of system clock frequency; 2-division timer 4 output; NSBT0 pin input
- Clock for UART ····· 8-division of above clock; 2-division timer 4 output; NSBT0 pin input

www.DataSheet4U.com

www.DataSheet4U.com

Serial Interface (Continue)

Serial 1: 8-bit × 1
(synchronous type/remote control transmission/simple remote control receive) (transfer direction of MSB/LSB selectable, start condition function)

Clock source ····· 1/8, 1/16, 1/32, 1/64, 1/128, 1/256 of system clock frequency; 2-division timer 4 output; NSBT1 pin input

Remote control clock ····· 2-division timer 4 output

Serial 2: 8-bit × 1 (I^2C) (master transmission/reception, slave transmission/reception)

Clock source ····· 1/144 to 1/252 of system clock; SCK pin input

OSD

OSD mode: Accommodation with menu(internal synchronous) or super impose(external synchronous) display

Applicable broadcasting system:NTSC, PAL, PAL-M, PAL-N

Screen configuration	: 24 characters × 2n rows (n = 1 to 6)
Character type	: max. 512 character types (variable, incude special characters)
Character size	: 12 × 18 dots (Vertical direction: 1 dot for 2H at not enlargement)
Enlarged characters	: each × 2, × 3 or × 4 settings in horizontal and vertical
Character interpolation	: none
Line background color	: 8-hue settable (settable in the row unit at menu display)
Line background intensity	: 8 gradations settable in the row unit (at output of composite video signal)
Screen background color	: 8-hue settable (at output of composite video signal)
Character color	: white (at output of composite video signal)
Character intensity	: 8 gradations settable in the row unit (at output of composite video signal)
Frame function	: 1-dot frame in 4 or 8 directions
Frame intensity	: 4 gradations settable in the row unit (at output of composite video signal)
Box shade function	: settable in the character unit (at output of composite video signal with 129 or more characters (character types))
Blinking	: none (covered by software)
Inverted character	: settable in the character unit
Halftone	: settable in the row unit in 2 intensity gradations (at output of external synchronous composite video signal)

CCD mode: Supports Closed Caption in the U.S.A.

Screen configuration	: 32 characters × 16 rows
Character type	: max. 128 character types (variable)
Character size	: 12 × 26 dots (Vertical direction: 1 dot for 1H, including 8 dots in the underlined area)
Enlarged characters	: none
Character interpolation	: none
Line background color	: 8-hue settable
Line background intensity	: 8 gradations settable in the screen unit (at output of composite video signal)
Screen background color	: 8-hue settable (at output of composite video signal)
Character color	: 8 colors (at RGB output)
	: White (at output of composite video signal)
Character intensity	: 8 gradations settable in the screen unit (at output of composite video signal)
Frame function	: none
Box shade function	: none
Inverted character	: none
Halftone	: settable in the row unit in 2 intensity gradations (at output of external synchronous composite video signal)
Others	: Underline, italic, blinking function and scroll
Input	: composite video signal input (output level: 1 V[p-p] / 2 V[p-p])
Clamp method	: sync tip clamp, clamp level in 4 levels
Output	: composite video output
	: digital output (6 pins)
Measure against image fluctuation	: built-in AFC circuit
Dot clock	: 1/2 of OSC oscillation clock (automatic phase adjustment)

See the next page for electrical characteristics, pin assignment and support tool.

www.DataSheet4U.com

www.DataSheet4U.com

XDS		Built-in U.S. closed caption data slicer (optional 2 line data can be extracted.)	
ROM Correction		Correcting address designation: up to 3 addresses possible Correction method: correction program being saved in internal RAM	
I/O Pins	**I/O**	75	• Common use: 66
	Input	2	• Common use: 2
A/D Inputs		8-bit × 13-ch. (without S/H)	
PWM		13-bit × 2-ch. (at repetition cycle 572 µs at 14.32 MHz), 10-bit × 2-ch. (at repetition cycle 71.5 µs at 14.32 MHz), 8-bit × 1-ch. (at repetition cycle 71.5 µs, 0.572 ms, 1.14 ms, 2.29 ms at 14.32 MHz)	
ICR		18-bit × 6-ch.	
OCR		16-bit × 2 (8-bit synchronous output; 4-bit 3-state synchronous output), 16-bit × 1 (weak electric field V-sync backup), 16-bit × 1 (Rec CTL)	
Special Ports		Buzzer output; 3-state output VLP pin; remote control receive; CTL signal input terminal; Capstan FG inputterminal; Sylinder(Durm) PG/FG input terminals; HSW output terminal; Head Amp/Rortary control output terminals; output of 1/2 OSC oscillation clock (2 V[p-p]); output of 1/4 OSC oscillation clock (1 V[p-p])	

Electrical Characteristics

Supply current

Parameter	Symbol	Condition	Limit			Unit
			min	typ	max	
Operating supply current	IDD1	14.32 MHz operation without load, VDD = 5 V		60	100	mA
	IDD2	1/1024 of 14.32 MHz operation without load, VDD = 3.0 V		2	5	mA
	IDD3	Stop of 14.32 MHz oscillation, VDD = 2.7 V 32 kHz oscillation operation without load		50	100	µA
Supply current at STOP	IDSP	Stop of oscillation without load, VDD = 5 V, Ta = 55 °C			10	µA
Supply current at HALT	IDHT0	14.32 MHz oscillation without load, VDD = 5 V		5	15	mA
	IDHT1	Stop of 14.32 MHz oscillation, VDD = 2.7 V 32 kHz oscillation operation without load		5	20	µA

(Ta = 25 °C ± 2 °C , VSS = 0 V)

A/D Converter Performance

Parameter	Symbol	Condition	Limit			Unit
			min	typ	max	
Conversion relative error	ΔNLAD				± 3	LSB
A/D Conversion Time	tAD	fosc = 14.32 MHz		8		µs
Analog Input Voltage					5	V

(Ta = 25 °C ± 2 °C , VDD = 5.0 V , VSS = 0 V)

www.DataSheet4U.com

www.DataSheet4U.com

Pin Assignment

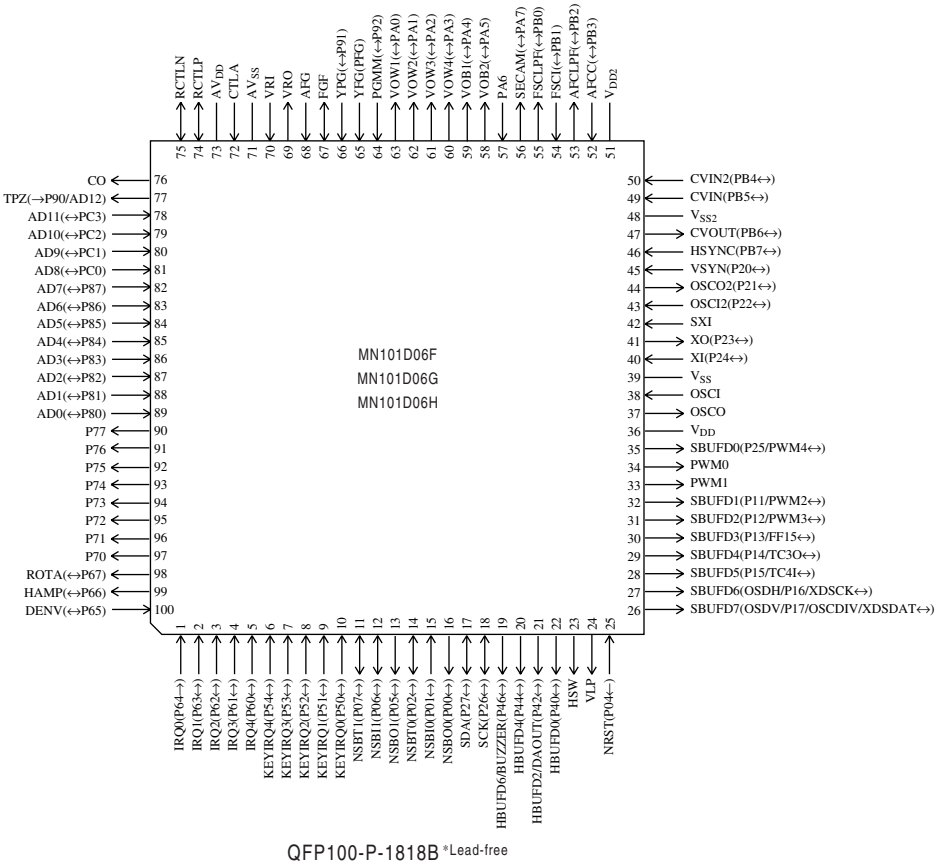

QFP100-P-1818B *Lead-free

Support Tool

In-circuit Emulator	PX-ICE101C / D + PX-PRB101D06-QFP100-P-1818B-M	
Flash Memory Built-in Type	Type	MN101DF06ZAF
	ROM (× 8-bit)	224 K
	RAM (× 8-bit)	6 K
	Minimum instruction execution time	0.1397 µs (at 4.0 V to 5.5 V, 14.32 MHz) 71.5 µs (at 3.0 V to 5.5 V, fixed to 14.32 MHz internal division) 61 µs (at 2.5 V to 5.5 V, 32.768 kHz)
	Package	QFP100-P-1818B *Lead-free

www.DataSheet4U.com

www.DataSheet4U.com

❑ MN101D07G,MN101D07H

Type	MN101D07G	MN101D07H
ROM (×8-bit)	128 K	160 K
RAM (×8-bit)	4 K	5 K
Package	LQFP112-P-2020 *Lead-free	
Minimum Instruction Execution Time	With main clock operated: 0.1397 µs (at 4.0 V to 5.5 V, 14.32 MHz) 71.5 µs (at 3.0 V to 5.5 V fixed to 14.32 MHz internal frequency division) When sub-clock operated: 61 µs (at 2.2 V to 5.5 V, 32.768 kHz)	
Interrupts	• RESET • Runaway • External 0 • External 1 • External 2 • External 3 • External 4 • key input (P50 to 54) • Timer 0 • Timer 1 • Timer 2 • Timer 3 • Timer 4 • Timer 6 • Timer 7 • Capstan FG • Control • HSW • Cylinder(Drum) FG • Servo V-sync • Synchronous output • OSD • XDS • Serial 0 • Serial 1 • Serial 2 • A/D (common with PWM 4 reference frequency) • OSD V-sync	
Timer Counter	Timer counter 0: 16-bit × 1 (timer function, clock function [max. 2 s or max. 36 h at cascade-connecting with timer 6]) Clock source ····· 1/2, (1/4,) 1/8, (1/16) of system clock frequency; overflow of timer counter 6; 1/512 of XI oscillation clock or OSC oscillation clock frequency Interrupt source ····· overflow of timer counter 0 Timer counter 1: 16-bit × 1 (timer function, linear timer counter function) Clock source ····· 1/2, (1/4,) 1/8, (1/16) of system clock frequency; CTL signal Interrupt source ····· overflow of timer counter 1 Timer counter 2: 16-bit × 1 (timer function, input capture (DCTL specified edge), duty judgment of DCTL signal) Clock source ····· 1/2, (1/4,) 1/8, (1/16,) 1/12, (1/24) of system clock frequency Interrupt source ····· overflow of timer counter 2; input of DCTL specified edge; underflow of timer 2 shift register 4-bit counter; coincidence of timer 2 shift register with timer 2 shift register compare register Timer counter 3: 16-bit × 1 (timer function, detection of serial indexing, generation of remote control output carrier frequency) Clock source ····· 1/2, (1/4,) 1/8, (1/16) of system clock frequency; XI oscillation clock Interrupt source ····· overflow of timer counter 3 Timer counter 4: 16-bit × 1 (timer function, event count [P15 input], generation of serial transmission clock) Clock source ····· 1/8, (1/16) of system clock frequency; external clock input Interrupt source ····· overflow of timer counter 4; coincidence of timer counter 4 with OCR4 Timer counter 5: 19-bit × 1 (watchdog, stable oscillation waiting function) Clock source ····· system clock Watchdog interrupt source ··· $1/2^{16}$, $1/2^{19}$ of timer counter 5 frequency Clear by stable oscillation ··· after 256 counts by timer counter 5 (2^{18} counts of OSC oscillation clock) Timer counter 6: 16-bit × 1 (clock function [max. 2 s]) Clock source ····· 1/512 of OSC oscillation clock frequency; XI oscillation clock; 1/4, (1/8,) 1/64, (1/128) of system clock frequency Interrupt source ····· $1/2^{13}$, $1/2^{14}$, $1/2^{15}$ overflow of timer counter 6 Timer counter 7: 8-bit × 1 or 4-bit × 2 (timer function, event count) Clock source ····· 1/4, (1/8,) 1/16, (1/32) of system clock frequency; external clock input Interrupt source ····· overflow of timer counter 7 (although when 4-bit × 2, there is one interrupt vector.)	
Serial Interface	Serial 0: 8-bit × 1 (synchronous type/start-stop synchronous type) (transfer direction of MSB/LSB selectable) Synchronous type clock source ··· 1/8, 1/16, 1/32, 1/64, 1/128, 1/256 of system clock frequency; 2-division timer 4 output; NSBT0 pin input Clock for UART ····· 8-division of above clock; 2-division timer 4 output; NSBT0 pin input	

www.DataSheet4U.com

www.DataSheet4U.com

Serial Interface (Continue)

Serial 1: 8-bit × 1
(synchronous type/remote control transmission/simple remote control receive) (transfer direction of MSB/LSB selectable, start condition function)
Clock source ····· 1/8, 1/16, 1/32, 1/64, 1/128, 1/256 of system clock frequency; 2-division timer 4 output; NSBT1 pin input
Remote control clock ····· 2-division timer 4 output

Serial 2: 8-bit × 1 (I^2C) (master transmission/reception, slave transmission/reception)
Clock source ····· 1/144 to 1/252 of system clock, SCK pin input

OSD

OSD mode: Accommodation with menu(internal synchronous) or super impose(external synchronous) display

Applicable broadcasting system	: NTSC, PAL, PAL-M, PAL-N
Screen configuration	: 24 characters × 2n rows (n = 1 to 6)
Character type	: max. 512 character types (variable)
Character size	: 12 × 18 dots
Enlarged characters	: each × 2, × 3 or × 4 settings in horizontal and vertical
Character interpolation	: none
Line background color	: 8-hue settable (settable in the row unit at menu display)
Line background intensity	: 8 gradations settable in the row unit(at output of composite video signal)
Screen background color	: 8-hue settable (at output of composite video signal)
Character color	: white (at output of composite video signal)
Character intensity	: 8 gradations settable in the row unit
Frame function	: 1-dot frame in 4 or 8 directions (at output of composite video signal)
Frame intensity	: 4 gradations settable in the row unit
Box shade function	: settable in the character unit (at output of composite video signal with 129 or more characters (character types))
Blinking	: none (covered by software)
Inverted character	: settable in the character unit
Halftone	: settable in the row unit in 2 intensity gradations (at output of external synchronous composite video signal)

CCD mode: Supports Closed Caption in the U.S.A.

Screen configuration	: 32 characters × 16 rows
Character type	: max. 128 character types (variable)
Character size	: 12 × 26 dots (including 8 dots in the underlined area)
Enlarged characters	: none
Character interpolation	: none
Line background color	: 8-hue settable
Line background intensity	: 8 gradations settable in the screen unit (at output of composite video signal)
Screen background color	: 8-hue settable (at output of composite video signal)
Character color	: 8 colors (at RGB output)
	: White (at output of composite video signal)
Character intensity	: 8 gradations settable in the screen unit(at output of composite video signal)
Frame function	: none
Box shade function	: none
Inverted character	: none
Halftone	: settable in the row unit in 2 intensity gradations (at output of external synchronous composite video signal)
Others	: Underline, italic, blinking function and scroll
Input	: composite video signal input (output level: 1 V[p-p] / 2 V[p-p])
Clamp method	: sync tip clamp, clamp level in 4 levels
Output	: composite video output
	: output of Y/C split video signal
	: digital output (6 pins)
Measure against image fluctuation	: built-in AFC circuit
Dot clock	: 1/2 of OSC oscillation clock (automatic phase adjustment)

See the next page for electrical characteristics, pin assignment and support tool.

www.DataSheet4U.com

www.DataSheet4U.com

XDS		Built-in U.S. closed caption data slicer (optional 2 line data can be extracted.)	
ROM Correction		Correcting address designation: up to 3 addresses possible Correction method: correction program being saved in internal RAM	
I/O Pins	**I/O**	85	• Common use: 71
	Input	2	• Common use: 2
A/D Inputs		8-bit × 14-ch. (without S/H)	
PWM		13-bit × 2-ch. (at repetition cycle 572 µs at 14.32 MHz), 10-bit × 2-ch. (at repetition cycle 71.5 µs at 14.32 MHz), 8-bit × 1-ch. (at repetition cycle 71.5 µs, 0.572 ms, 1.14 ms, 2.29 ms at 14.32 MHz)	
ICR		18-bit × 6-ch.	
OCR		16-bit × 2 (8-bit synchronous output; 4-bit 3-state synchronous output), 16-bit × 1 (weak electric field V-sync backup), 16-bit × 1 (Rec CTL)	
Special Ports		Buzzer output; 3-state output VLP pin; remote control receive; CTL signal input terminal; Capstan FG inputterminal; Sylinder(Durm) PG/FG input terminals; HSW output terminal; Head Amp/Rortary control output terminals; output of 1/2 OSC oscillation clock (2 V[p-p]); output of 1/4 OSC oscillation clock (1 V[p-p])	

Electrical Characteristics

Supply current

Parameter	Symbol	Condition	Limit			Unit
			min	typ	max	
Operating supply current	IDD1	14.32 MHz operation without load, VDD = 5 V		60	100	mA
	IDD2	1/1024 of 14.32 MHz operation without load, VDD = 3.0 V		2	5	mA
	IDD3	Stop of 14.32 MHz oscillation, VDD = 2.7 V 32 kHz oscillation operation without load		50	100	µA
Supply current at STOP	IDSP	Stop of oscillation without load, VDD = 5 V, Ta = 55 °C			20	µA
Supply current at HALT	IDHT0	14.32 MHz oscillation without load, VDD = 5 V		5	15	mA
	IDHT1	Stop of 14.32 MHz oscillation, VDD = 2.7 V 32 kHz oscillation operation without load		5	20	µA

(Ta = 25 °C ± 2 °C , VSS = 0 V)

A/D Converter Performance

Parameter	Symbol	Condition	Limit			Unit
			min	typ	max	
Conversion relative error	ΔNLAD				± 3	LSB
A/D Conversion Time	tAD	fosc = 14.32 MHz		8		µs
Analog Input Voltage					5	V

(Ta = 25 °C ± 2 °C ,VSS = 0 V)

www.DataSheet4U.com

www.DataSheet4U.com

Pin Assignment

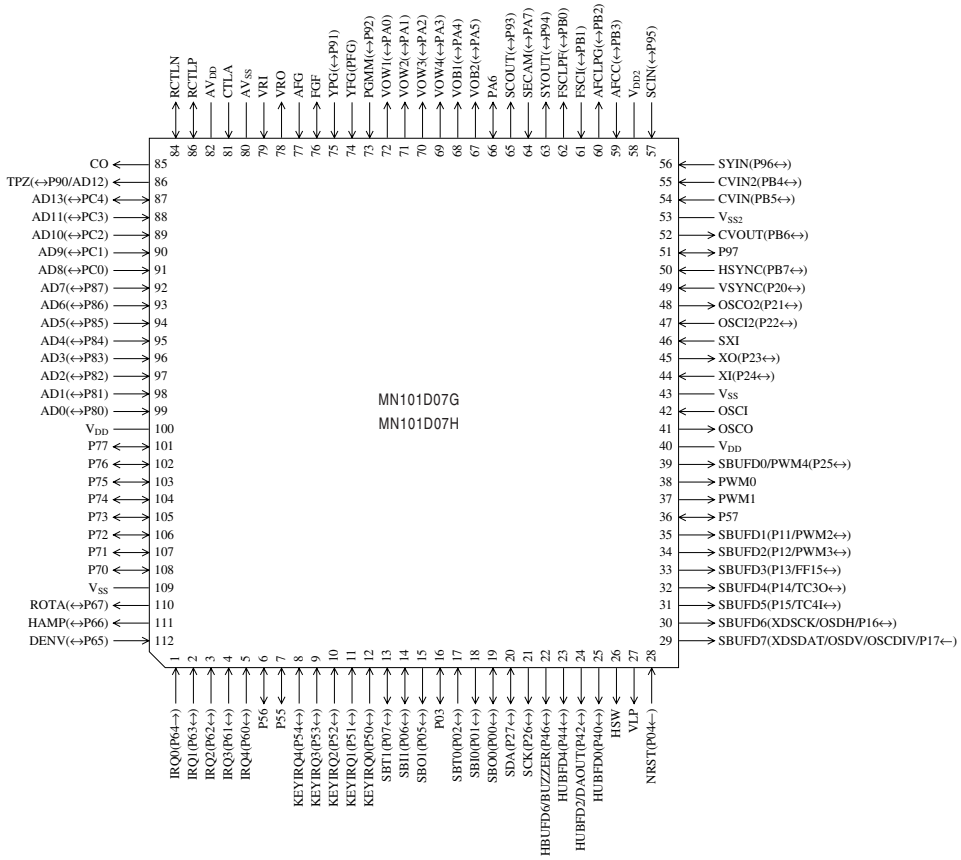

LQFP112-P-2020 *Lead-free

Support Tool

In-circuit Emulator	PX-ICE101C / D + PX-PRB101D07-LQFP112-P-2020-M	
Flash Memory Built-in Type	Type	MN101DF07ZAL
	ROM (× 8-bit)	224 K
	RAM (× 8-bit)	6 K
	Minimum instruction execution time	0.1397 µs (at 4.0 V to 5.5 V, 14.32 MHz) 71.5 µs (at 3.0 V to 5.5 V, fixed to 14.32 MHz internal division) 61 µs (at 2.5 V to 5.5 V, 32.768 kHz)
	Package	LQFP112-P-2020 *Lead-free

www.DataSheet4U.com

www.DataSheet4U.com

❑ MN101D08E

Type		MN101D08E
ROM (×8-bit)		80 K
RAM (×8-bit)		2 K
Package		LQFP080-P-1414A *Lead-free
Minimum Instruction Execution Time	With main clock operated	0.1397 µs (at 4.0 V to 5.5 V, 14.32 MHz) 71.5 µs (at 2.7 V to 5.5 V fixed to 14.32 MHz internal frequency division)
	When sub-clock operated	61 µs (at 2.5 V to 5.5 V, 32.768 kHz)
Interrupts		• RESET • Runaway • External 0, 1, 2, 3, 4 • Timer 0 • Timer 1 • Timer 2 • Timer 3 • Timer 6 • Capstan FG • Control • HSW • Cylinder(Drum) FG • Servo V-sync • Synchronous output • OSD • XDS • Serial 1 • Serial 2 • PWM 4 • OSD V-sync

Timer Counter

Timer counter 0: 8-bit × 1 (timer function)
- Clock source ····· 1/4, 1/16 of system clock frequency
- Interrupt source ····· overflow of timer counter 0

Timer counter 1: 8-bit × 1 (timer function, linear timer counter function)
- Clock source ····· 1/4 of system clock frequency; CTL signal
- Interrupt source ····· overflow of timer counter 1

Timer counter 2: 16-bit × 1 (timer function, input capture (CTL specified edge), duty judgment of CTL signal)
- Clock source ····· 1/4, 1/16, 1/24 of system clock frequency
- Interrupt source ····· overflow of timer counter 2; input of CTL specified edge; underflow of timer 2 shift register 4-bit counter; coincidence of timer 2 shift register with timer 2 shift register compare register

Timer counter 3: 16-bit ´ 1 (timer function)
- Clock source ····· 1/4, 1/16 of system clock frequency
- Interrupt source ····· overflow of timer counter 3

Timer counter 5: 19-bit × 1 (watchdog, stable oscillation waiting function)
- Clock source ····· system clock
- Watchdog interrupt source ·· $1/2^{16}$, $1/2^{19}$ of timer counter 5 frequency
- Clear by stable oscillation ·· after 256 counts by timer counter 5 (2^{18} counts of OSC oscillation clock)

Timer counter 6: 16-bit × 1 (clock function [max. 2 s])
- Clock source ····· 1/512 of OSC oscillation clock frequency; XI oscillation clock; 1/8, 1/128 of system clock frequency
- Interrupt source ····· $1/2^{13}$, $1/2^{14}$, $1/2^{15}$ overflow of timer counter 6

Serial Interface

Serial 1: 8-bit × 1 (synchronous type)
(transfer direction of MSB/LSB selectable, start condition function)
- Clock source ····· 1/8, 1/16, 1/32, 1/64, 1/128, 1/256 of system clock frequency; NSBT1 pin input

Serial 2: 8-bit × 1 (I^2C) (master transmission/reception, slave transmission/reception)
- Clock source ····· 1/144 to 1/252 of system clock; SCK pin input

www.DataSheet4U.com

www.DataSheet4U.com

OSD	Display mode	:	Menu(Internal synchronized) display, super impose(external synchronized) display
	Applicable broadcasting system	:	NTSC, PAL, PAL-M, PAL-N
	Screen configuration	:	24 characters ´ 2n rows (n = 1 to 6)
	Character type	:	max. 128 character types (variable, include special characters)
	Character size	:	12 ´ 18 dots (Vertical direction: 1 dot for 2H at not enlargement.)
	Enlarged characters	:	each ´ 2 settings in horizontal and vertical
	Character interpolation	:	none
	Line background color	:	8-hue settable (settable in the row unit at menu display)
	Line background intensity	:	8 gradations settable in the row unit
	Screen background color	:	8-hue settable at menu display
	Character color	:	white
	Character intensity	:	8 gradations settable in the row unit
	Frame function	:	1-dot frame in 4 directions
	Frame intensity	:	4 gradations settable in the row unit
	Blinking	:	none (covered by software)
	Inverted character	:	settable in the character unit
	Halftone	:	none
	Input	:	composite video signal input (output level: 1 V[p-p] / 2 V[p-p])
	Clamp method	:	sync tip clamp, clamp level in 4 levels
	Output	:	composite video output
	Measure against image fluctuation:		built-in AFC circuit
	Dot clock	:	1/2 of OSC oscillation clock (automatic phase adjustment)

XDS	Built-in U.S. closed caption data slicer (optional 1 line data can be extracted.)
ROM Correction	Correcting address designation: up to 3 addresses possible Correction method: correction program being saved in internal RAM

I/O Pins	**I/O**	56	• Common use: 45
	Input	1	• Common use: 1

A/D Inputs	8-bit × 11-ch. (without S/H)
PWM	13-bit × 2-ch. (at repetition cycle 572 µs at 14.32 MHz), 8-bit × 1-ch. (at repetition cycle 71.5 µs, 0.572 ms, 1.14 ms, 2.29 ms at 14.32 MHz)
ICR	16-bit × 2-ch.(Speed system), 18-bit × 4-ch.(Phase system)
OCR	16-bit × 3 (Synchronous output × 2, Rec CTL × 1)
Special Ports	3-state output (PTO) VLP pin; CTL input; Capstan FG input; Cylinder(Drum) PG/FG inputs; HSW output; Head amp/ Rotary control outputs; output of 1/4 OSC oscillation clock (1 V[p-p])
Notes	

See the next page for electrical characteristics, pin assignment and support tool.

www.DataSheet4U.com

www.DataSheet4U.com

Electrical Characteristics

Supply current

Parameter	Symbol	Condition	Limit			Unit
			min	typ	max	
Operating supply current	IDD1	14.32 MHz operation without load, VDD = 5 V		50	100	mA
	IDD2	1/1024 of 14.32 MHz operation without load, VDD = 2.7 V		2	5	mA
	IDD3	Stop of 14.32 MHz oscillation, VDD = 2.7 V 32 kHz oscillation operation without load		50	100	µA
Supply current at STOP	IDSP	Stop of oscillation without load, VDD = 5 V			10	µA
Supply current at HALT	IDHT0	14.32 MHz oscillation without load, VDD = 5 V		5	15	mA
	IDHT1	Stop of 14.32 MHz oscillation, VDD = 2.7 V 32 kHz oscillation operation without load		5	20	µA

(Ta = 25°C ± 2°C , VSS = 0 V)

A/D Converter Performance

Parameter	Symbol	Condition	Limit			Unit
			min	typ	max	
Conversion relative error	ΔNLAD				± 3	LSB
A/D Conversion Time	tAD	fosc = 14.32 MHz		8		µs
Analog Input Voltage					5	V

(Ta = 25°C ± 2°C , VDD = 5.0 V, VSS = 0 V)

www.DataSheet4U.com

www.DataSheet4U.com

Pin Assignment

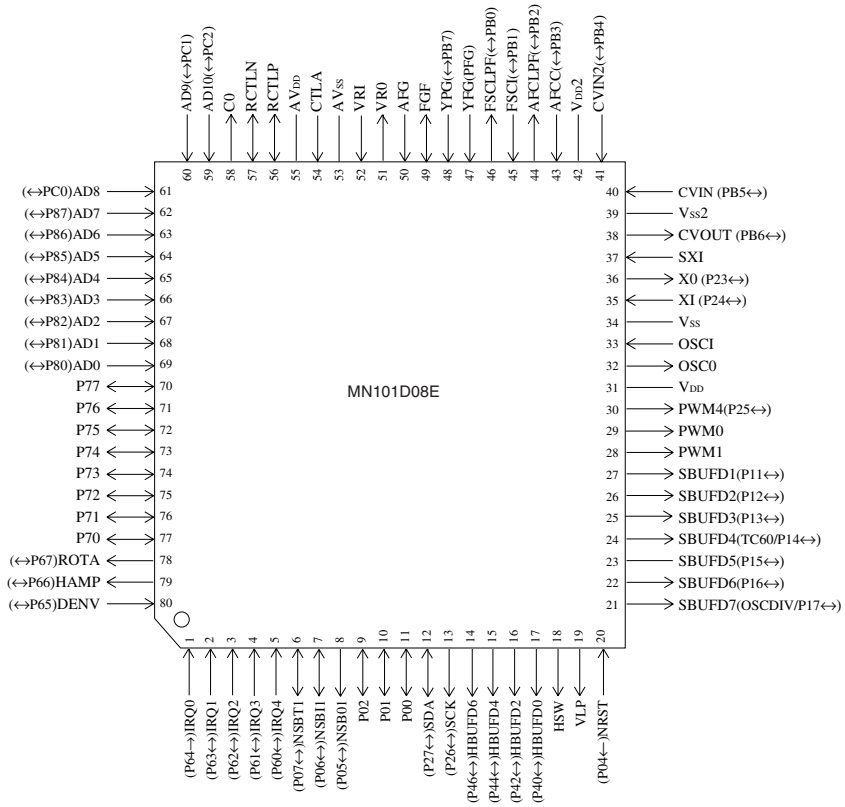

LQFP080-P-1414A *Lead-free

Support Tool

In-circuit Emulator	PX-ICE101C / D + PX-PRB101D08-LQFP080-P-1414A	
Flash Memory Built-in Type	Type	MN101DF08G AL
	ROM (× 8-bit)	128 K
	RAM (× 8-bit)	4 K
	Minimum instruction execution time	0.1397 µs (at 4.0 V to 5.5 V, 14.32 MHz) 71.5 µs (at 2.7 V to 5.5 V, fixed to 14.32 MHz internal division) 61 µs (at 2.5 V to 5.5 V, 32.768 kHz)
	Package	LQFP080-P-1414A *Lead-free

www.DataSheet4U.com

www.DataSheet4U.com

❑ MN101D09E

Type		MN101D09E
ROM (×8-bit)		80 K
RAM (×8-bit)		2 K
Package		QFP100-P-1818B *Lead-free
Minimum Instruction Execution Time	With main clock operated	0.1397 µs (at 4.0 V to 5.5 V, 14.32 MHz) 71.5 µs (at 2.7 V to 5.5 V fixed to 14.32 MHz internal frequency division)
	When sub-clock operated	61 µs (at 2.5 V to 5.5 V, 32.768 kHz)
Interrupts		• RESET • Runaway • External 0, 1, 2, 3, 4 • Timer 0 • Timer 1 • Timer 2 • Timer 3 • Timer 6 • Capstan FG • Control • HSW • Cylinder(Drum) FG • Servo V-sync • Synchronous output • OSD • XDS • Serial 1 • Serial 2 • PWM 4 • OSD V-sync

Timer Counter

Timer counter 0: 8-bit × 1 (timer function)
- Clock source ····· 1/4, 1/16 of system clock frequency
- Interrupt source ····· overflow of timer counter 0

Timer counter 1: 8-bit × 1 (timer function, linear timer counter function)
- Clock source ····· 1/4 of system clock frequency; CTL signal
- Interrupt source ····· overflow of timer counter 1

Timer counter 2: 16-bit × 1 (timer function, input capture (CTL specified edge), duty judgment of CTL signal)
- Clock source ····· 1/4, 1/16, 1/24 of system clock frequency
- Interrupt source ····· overflow of timer counter 2; input of CTL specified edge; underflow of timer 2 shift register 4-bit counter; coincidence of timer 2 shift register with timer 2 shift register compare register

Timer counter 3: 16-bit × 1 (timer function)
- Clock source ····· 1/4, 1/16 of system clock frequency
- Interrupt source ····· overflow of timer counter 3

Timer counter 5: 19-bit × 1 (watchdog, stable oscillation waiting function)
- Clock source ····· system clock
- Watchdog interrupt source ·· $1/2^{16}$, $1/2^{19}$ of timer counter 5 frequency
- Clear by stable oscillation ·· after 256 counts by timer counter 5 (2^{18} counts of OSC oscillation clock)

Timer counter 6: 16-bit × 1 (clock function [max. 2 s])
- Clock source ····· 1/512 of OSC oscillation clock frequency; XI oscillation clock; 1/8, 1/128 of system clock frequency
- Interrupt source ····· $1/2^{13}$, $1/2^{14}$, $1/2^{15}$ overflow of timer counter 6

Serial Interface

Serial 1: 8-bit × 1 (synchronous type)
(transfer direction of MSB/LSB selectable, start condition function)
- Clock source ····· 1/8, 1/16, 1/32, 1/64, 1/128, 1/256 of system clock frequency; NSBT1 pin input

Serial 2: 8-bit × 1 (I^2C) (master transmission/reception, slave transmission/reception)
- Clock source ····· 1/144 to 1/252 of system clock; SCK pin input

www.DataSheet4U.com

www.DataSheet4U.com

OSD	Display mode	:	Menu(Internal synchronized) display, super impose(external synchronized) display
	Applicable broadcasting system	:	NTSC, PAL, PAL-M, PAL-N
	Screen configuration	:	24 characters ´ 2n rows (n = 1 to 6)
	Character type	:	max. 128 character types (variable, include special characters)
	Character size	:	12 ´ 18 dots (Vertical direction: 1 dot for 2H at not enlargement)
	Enlarged characters	:	each ´ 2 settings in horizontal and vertical
	Character interpolation	:	none
	Line background color	:	8-hue settable in the row unit at menu display
	Line background intensity	:	8 gradations settable in the row unit
	Screen background color	:	8-hue settable at omenu display
	Character color	:	white
	Character intensity	:	8 gradations settable in the row unit
	Frame function	:	1-dot frame in 4 directions
	Frame intensity	:	4 gradations settable in the row unit
	Blinking	:	none (covered by software)
	Inverted character	:	settable in the character unit
	Halftone	:	none
	Input	:	composite video signal input (output level: 1 V[p-p] / 2 V[p-p])
	Clamp method	:	sync tip clamp, clamp level in 4 levels
	Output	:	composite video output
	Measure against image fluctuation:		built-in AFC circuit
	Dot clock	:	1/2 of OSC oscillation clock (automatic phase adjustment)

XDS	Built-in U.S. closed caption data slicer (optional 1 line data can be extracted.)		
ROM Correction	Correcting address designation: up to 3 addresses possible Correction method: correction program being saved in internal RAM		
I/O Pins	**I/O**	56	• Common use: 45
	Input	1	• Common use: 1
A/D Inputs	8-bit × 11-ch. (without S/H)		
PWM	13-bit × 2-ch. (at repetition cycle 572 µs at 14.32 MHz), 8-bit × 1-ch. (at repetition cycle 71.5 µs, 0.572 ms, 1.14 ms, 2.29 ms at 14.32 MHz)		
ICR	16-bit × 2-ch.(Speed system), 18-bit × 4-ch.(Phase system)		
OCR	16-bit × 3 (Synchronous output × 2, Rec CTL × 1)		
Special Ports	3-state output (PTO) VLP pin; CTL input; Capstan FG input; Cylinder(Drum) PG/FG inputs; HSW output; Head amp/ Rotary control outputs; output of 1/4 OSC oscillation clock (1 V[p-p])		
Notes			

See the next page for electrical characteristics, pin assignment and support tool.

www.DataSheet4U.com

www.DataSheet4U.com

Electrical Characteristics

Supply current

Parameter	Symbol	Condition	Limit			Unit
			min	typ	max	
Operating supply current	IDD1	14.32 MHz operation without load, VDD = 5 V		50	100	mA
	IDD2	1/1024 of 14.32 MHz operation without load, VDD = 2.7 V		2	5	mA
	IDD3	Stop of 14.32 MHz oscillation, VDD = 2.7 V 32 kHz oscillation operation without load		50	100	µA
Supply current at STOP	IDSP	Stop of oscillation without load, VDD = 5 V			10	µA
Supply current at HALT	IDHT0	14.32 MHz oscillation without load, VDD = 5 V		5	15	mA
	IDHT1	Stop of 14.32 MHz oscillation, VDD = 2.7 V 32 kHz oscillation operation without load		5	20	µA

(Ta = 25°C ± 2°C , VSS = 0 V)

A/D Converter Performance

Parameter	Symbol	Condition	Limit			Unit
			min	typ	max	
Conversion relative error	ΔNLAD				± 3	LSB
A/D Conversion Time	tAD	fosc = 14.32 MHz		8		µs
Analog Input Voltage					5	V

(Ta = 25°C ± 2°C , VDD = 5.0 V, VSS = 0 V)

www.DataSheet4U.com

www.DataSheet4U.com

Pin Assignment

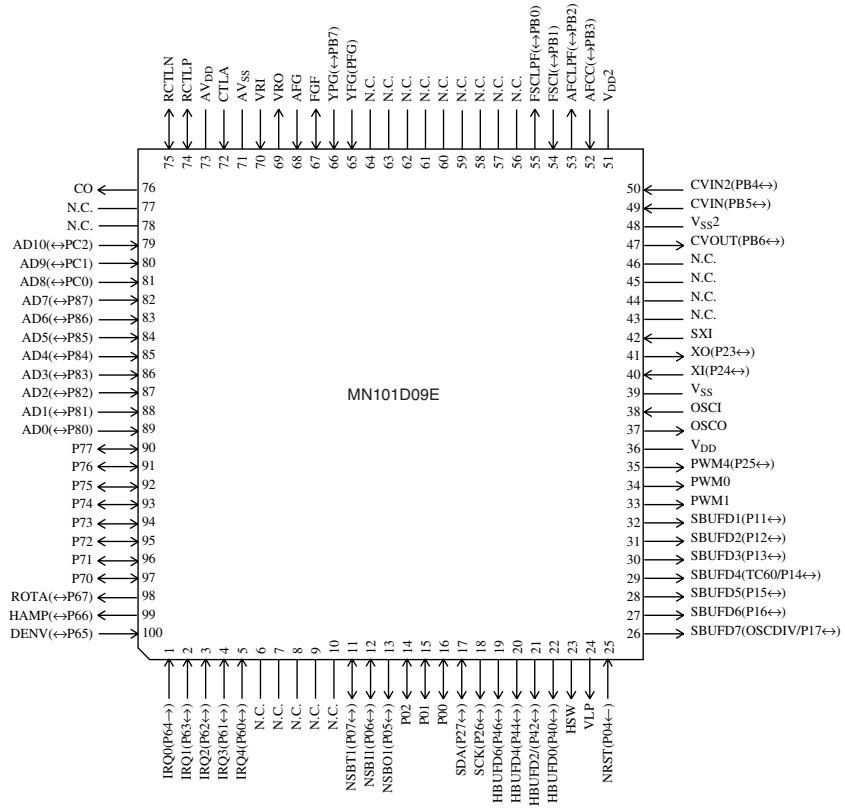

QFP100-P-1818B *Lead-free

Support Tool

In-circuit Emulator	PX-ICE101C / D + PX-PRB101D08-QFP100-P-1818B-M	
Flash Memory Built-in Type	Type	MN101DF09GAF
	ROM (× 8-bit)	128 K
	RAM (× 8-bit)	4 K
	Minimum instruction execution time	0.1397 µs (at 4.0 V to 5.5 V, 14.32 MHz) 71.5 µs (at 2.7 V to 5.5 V, fixed to 14.32 MHz internal division) 61 µs (at 2.5 V to 5.5 V, 32.768 kHz)
	Package	QFP100-P-1818B *Lead-free

www.DataSheet4U.com

www.DataSheet4U.com

❑ MN101D10F , MN101D10G

Type	MN101D10F	MN101D10G
ROM (×8-bit)	96 K	128 K
RAM (×8-bit)	2.5 K	3.5 K
Package	QFP100-P-1818B *Lead-free	
Minimum Instruction Execution Time	With main clock operated: 0.1397 µs (at 4.0 V to 5.5 V, 14.32 MHz) 71.5 µs (at 2.7 V to 5.5 V fixed to 14.32 MHz internal frequency division) When sub-clock operated: 61 µs (at 2.5 V to 5.5 V, 32.768 kHz)	
Interrupts	• RESET • Runaway • External 0 • External 1 • External 2 • External 3 • External 4 • Timer 0 • Timer 1 • Timer 2 • Timer 3 • Timer 6 • Capstan FG • Control • HSW • Cylinder(Drum) FG • Servo V-sync • Synchronous output • OSD • XDS • Serial 0 • Serial 1 • Serial 2 • PWM 4 • OSDV-sync	

Timer Counter

Timer counter 0: 8-bit × 1 (timer function)
- Clock source ····· 1/4, 1/16 of system clock frequency
- Interrupt source ····· overflow of timer counter 0

Timer counter 1: 8-bit × 1 (timer function, linear timer counter function)
- Clock source ····· 1/4 of system clock frequency; CTL signal
- Interrupt source ····· overflow of timer counter 1

Timer counter 2: 16-bit × 1 (timer function, input capture,duty judgment of CTL signal(VISS/VASS detection function), generation of remote control output carrier frequency)
- Clock source ····· 1/4, 1/16, 1/24 of system clock frequency
- Interrupt source ····· overflow of timer counter 2; input of CTL specified edge; underflow of timer 2 shift register 4-bit counter; coincidence of timer 2 shift register with timer 2 shift register compare register

Timer counter 3: 16-bit × 1 (timer function, generation of serial transmission clock)
- Clock source ····· 1/4, 1/16 of system clock frequency
- Interrupt source ····· overflow of timer counter 3

Timer counter 5: 19-bit × 1 (watchdog, stable oscillation waiting function)
- Clock source ····· system clock
- Watchdog interrupt source ··· $1/2^{16}$, $1/2^{19}$ of timer counter 5 frequency
- Clear by stable oscillation ··· after 256 counts by timer counter 5 (2^{18} counts of OSC oscillation clock)

Timer counter 6: 16-bit × 1 (clock function [max. 2 s])
- Clock source ····· 1/512 of OSC oscillation clock frequency; XI oscillation clock; 1/8, 1/128 of system clock frequency
- Interrupt source ····· $1/2^{13}$, $1/2^{14}$, $1/2^{15}$ overflow of timer counter 6

Serial Interface

Serial 0: 8-bit × 1 (synchronous type)
(transfer direction of MSB/LSB selectable, start condition function)
- Clock source ····· 1/8, 1/16, 1/32, 1/64, 1/128, 1/256 of system clock frequency; NSBT0 pin input

Serial 1: 8-bit × 1 (synchronous type/remote control transmission)
(transfer direction of MSB/LSB selectable, start condition function)
- Clock source ····· 1/8, 1/16, 1/32, 1/64, 1/128, 1/256 of system clock frequency; 2-division timer 3 output; NSBT1 pin input
- Remote control clock ····· 2-division timer 3 output

Serial 2: 8-bit × 1 (I^2C) (master transmission/reception, slave transmission/reception)
- Clock source ····· 1/144 to 1/252 of system clock; SCK pin input

www.DataSheet4U.com

www.DataSheet4U.com

OSD	Display mode	:	menu(internal synchronized) display, superimpose(externally synchronized) display	
	Applicable broadcasting system	:	NTSC, PAL, PAL-M, PAL-N	
	Screen configuration	:	24 characters × 2n rows (n = 1 to 6)	
	Character type	:	max. 256 character types (variable, include special characters)	
	Character size	:	12 × 18 dots (vertical direction: 1 dot for 2H at not enlargement)	
	Enlarged characters	:	each × 2 settings in horizontal and vertical	
	Character interpolation	:	none	
	Line background color	:	8-hue settable in the row unit at menu display	
	Line background intensity	:	8 gradations settable in the row unit	
	Screen background color :	:	8-huesettable at menu display	
	Character color	:	white	
	Character intensity	:	8 gradations settable in the row unit	
	Border function	:	1-dot border in 8 directions	
	Border brightness	:	4 gradations settable in the row unit	
	Blinking	:	none (covered by software)	
	Inverted character	:	settable in the character unit	
	Halftone	:	none	
	Input	:	composite video signal input (output level: 1 V[p-p] / 2 V[p-p])	
	Clamp method	:	sync tip clamp, clamp level in 4 levels	
	Output	:	composite video output	
	Measure against image fluctuation	:	built-in AFC circuit	
	Dot clock	:	1/2 of OSC oscillation clock (automatic phase adjustment)	
	MESECAM compatibility	:	Subcarrier leak function for superimpose display	
XDS	Built-in U.S. closed caption data slicer (optional 1 line data can be extracted.)			
ROM Correction	Correcting address designation: up to 3 addresses possible Correction method: correction program being saved in internal RAM			
I/O Pins	**I/O**	76	• Common use: 56	
	Input	1	• Common use: 1	
A/D Inputs	8-bit × 12-ch. (without S/H)			
PWM	13-bit × 2-ch. (at repetition cycle 572 µs at 14.32 MHz), 8-bit × 1-ch. (at repetition cycle 35.7 µs, 0.572 ms, 1.14 ms, 2.29 ms at 14.32 MHz)			
ICR	16-bit × 2-ch.(Speed system), 18-bit × 4-ch.(Phase system)			
OCR	16-bit × 3 (Synchronous output × 2, Rec CTL × 1)			
Special Ports	3-state output (PTO) VLP pin; CTL input;Capstan FG input; Cylinder(Drum) PG/FG inputs; HSW output; Head amp/ Rotary outputs; built-in FG amp; output of 1/4 OSC oscillation clock (1 V[p-p])			
Notes				

See the next page for electrical characteristics, pin assignment and support tool.

www.DataSheet4U.com

www.DataSheet4U.com

Electrical Characteristics

Supply current

Parameter	Symbol	Condition	Limit			Unit
			min	typ	max	
Operating supply current	IDD1	14.32 MHz operation without load, VDD = 5 V		50	100	mA
	IDD2	1/1024 of 14.32 MHz operation without load, VDD = 2.7 V		2	5	mA
	IDD3	Stop of 14.32 MHz oscillation, VDD = 2.7 V 32 kHz oscillation operation without load		50	100	µA
Supply current at STOP	IDSP	Stop of oscillation without load, VDD = 5 V, Ta = 55 °C			10	µA
Supply current at HALT	IDHT0	14.32 MHz oscillation without load, VDD = 5 V		5	15	mA
	IDHT1	Stop of 14.32 MHz oscillation, VDD = 2.7 V 32 kHz oscillation operation without load		5	20	µA

(Ta = 25 °C ± 2 °C , VSS = 0 V)

A/D Converter Performance

Parameter	Symbol	Condition	Limit			Unit
			min	typ	max	
Conversion relative error	ΔNLAD				± 3	LSB
A/D Conversion Time	tAD	fosc = 14.32 MHz		8		µs
Analog Input Voltage					5	V

(Ta = 25 °C ± 2 °C , VDD = 5.0 V, VSS = 0 V)

www.DataSheet4U.com

www.DataSheet4U.com

Pin Assignment

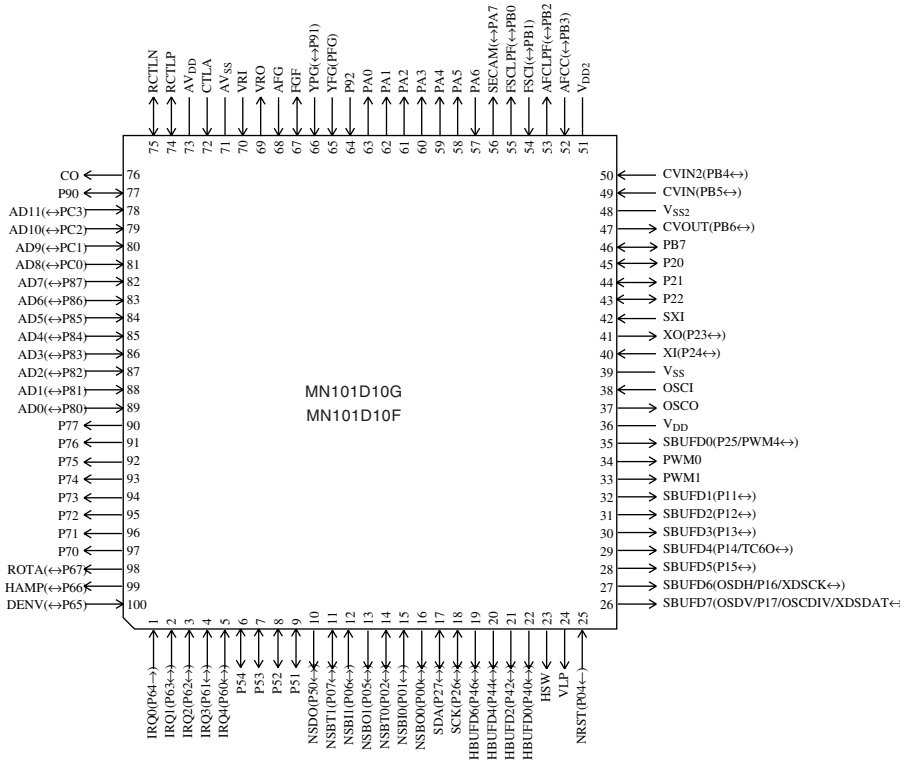

QFP100-P-1818B *Lead-free

Support Tool

In-circuit Emulator	PX-ICE101C / D + PX-PRB101D10-QFP100-P-1818B-CN-M	
Flash Memory Built-in Type	Type	MN101DF10GAF
	ROM (× 8-bit)	128 K
	RAM (× 8-bit)	4 K
	Minimum instruction execution time	0.1397 µs (at 4.0 V to 5.5 V, 14.32 MHz) 71.5 µs (at 2.7 V to 5.5 V, fixed to 14.32 MHz internal division) 61 µs (at 2.5 V to 5.5 V, 32.768 kHz)
	Package	QFP100-P-1818B *Lead-free

www.DataSheet4U.com

www.DataSheet4U.com

❑ MN101C07A

Type			MN101C07A
ROM (×8-bit)			32 K
RAM (×8-bit)			1 K
Package			LQFP064-P-1414 *Lead-free
Minimum Instruction Execution Time			0.25 µs (at 2.7 V to 5.5 V, 8 MHz) 125 µs (at 2.7 V to 5.5 V, 32 kHz)
Interrupts			• RESET • Watchdog • External 0 • External 1 • External 2 • External 3 • External 4 • Timer 2 • Timer 3 • Timer 4 • Timer 5 • Time base • Serial 0 • Serial 1 • Automatic transfer finish • A/D conversion finish • Key scan
Timer Counter			Timer counter 2 : 8-bit × 1 (square-wave/8-bit PWM output, event count, synchronous output event) Clock source ····· 1/1, 1/4 of system clock frequency; 1/1 of XI oscillation clock frequency; external clock input Interrupt source ····· coincidence with compare register 2 Timer counter 3 : 8-bit × 1 (square-wave output, event count, generation of remote control carrier, serial 0 baud rate timer) Clock source ····· 1/4, 1/16 of system clock frequency; 1/1 of OSC oscillation clock frequency; external clock input Interrupt source ····· coincidence with compare register 3 Timer counter 2, 3 can be cascade-connected. Timer counter 4 : 16-bit × 1 (square-wave/16-bit PWM output, event count, synchronous output event, input capture) Clock source ····· 1/4, 1/16 of system clock frequency; 1/1 of OSC oscillation clock frequency; external clock input Interrupt source ····· coincidence with compare register 4 Time base timer (one-minute count setting, independently operable 8-bit timer counter 5) Clock source ····· 1/4 of system clock frequency; 1/1, 1/8192 of OSC oscillation clock frequency; 1/1, 1/8192 of XI oscillation clock frequency Interrupt source ····· coincidence with compare register 5; 1/8192 prescaler overflow Watchdog timer Interrupt source ····· 1/2097152 of system clock frequency
Serial Interface			Serial 0 : synchronous type/simple UART (half-duplex) × 1 Clock source ····· 1/2, 1/4, 1/16 of system clock frequency; 1/2 of timer counter 3 frequency Serial 1 : synchronous type × 1 Clock source ····· 1/2, 1/8, 1/64 of system clock frequency; 1/2 of timer counter 3 frequency
I/O Pins	**I/O**	27	• Common use : 21 • Specified pull-up resistor avaiable • Input/output selectable (bit unit)
	High Voltage	26	• Output: 18 • I/O: 8 • P-ch open drain (breakdown voltage −30 V): FL drive: 26 • Specified pull-down resistor mask option: 8
A/D Inputs			8-bit × 5-ch. (with S/H)
FL			(8 to 16) segments × (18 to 10) digits
Special Ports			Buzzer output, remote control carrier signal output

www.DataSheet4U.com

www.DataSheet4U.com

Electrical Characteristics

Supply current

Parameter	Symbol	Condition	Limit			Unit
			min	typ	max	
Operating supply current	IDD1	fosc = 8 MHz, VDD = 5 V			25	mA
	IDD2	fx = 32 kHz, VDD = 3 V			120	µA
Supply current at HALT	IDD3	fx = 32 kHz, VDD = 3 V			10	µA
Supply current at STOP	IDD4	VDD = 3 V			10	µA

Pin Assignment

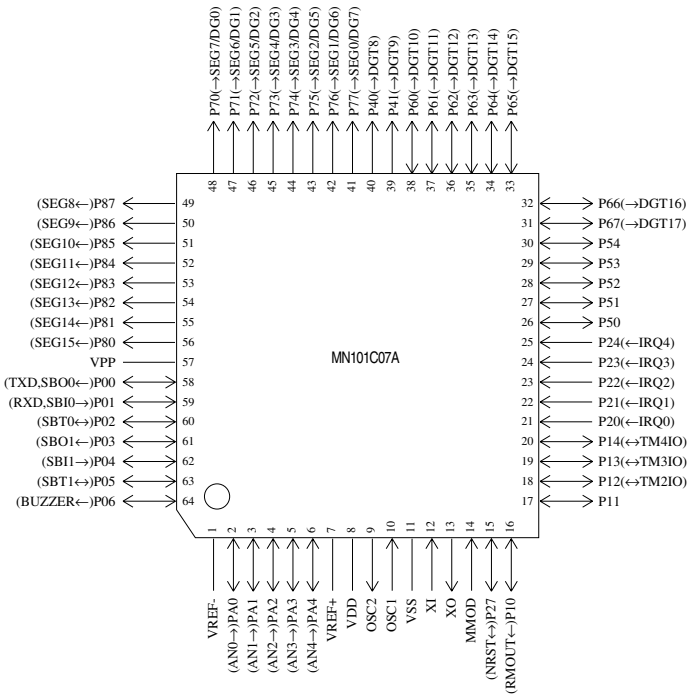

LQFP064-P-1414 *Lead-free

Support Tool

In-circuit Emulator	PX-ICE101C / D + PX-PRB101C07-LQFP064-P-1414	
EPROM Built-in Type	Type	MN101CP07D
	ROM (× 8-bit)	64 K
	RAM (× 8-bit)	2 K
	Minimum instruction execution time	0.25 µs (at 2.7 V to 5.5 V, 8 MHz) 125 µs (at 2.7 V to 5.5 V, 32 kHz)
	Package	LQFP064-P-1414 *Lead-free

www.DataSheet4U.com

www.DataSheet4U.com

❑ MN101C35D

Type	MN101C35D
ROM (×8-bit)	64 K
RAM (×8-bit)	2 K
Package	QFP100-P-1818B *Lead-free
Minimum Instruction Execution Time	0.25 µs (at 2.7 V to 5.5 V, 8 MHz) 125 µs (at 2.2 V to 5.5 V, 32 kHz)* * The lower limit for operation guarantee for EPROM built-in type is 2.7 V.
Interrupts	• RESET • Watchdog • External 0 • External 1 • External 2 • External 3 • External 4 • Timer 0 • Timer 1 • Timer 2 • Timer 3 • Timer 4 • Timer 5 • Time base • Serial 0 • Serial 1 • Serial 2 • Automatic transfer finish • A/D conversion finish • Key scan
Timer Counter	Timer counter 0 : 8-bit × 1 (square-wave/8-bit PWM output, event count, generation of remote control carrier) Clock source ····· 1/1, 1/4 of system clock frequency; 1/1 of OSC oscillation clock frequency; external clock input Interrupt source ····· coincidence with compare register 0 Timer counter 1 : 8-bit × 1 (square-wave output, event count, synchronous output event) Clock source ····· 1/16, 1/64 of system clock frequency; 1/1 of XI oscillation clock frequency; external clock input Interrupt source ····· coincidence with compare register 1 Timer counter 0, 1 can be cascade-connected. Timer counter 2 : 8-bit × 1 (square-wave/8-bit PWM output, event count, synchronous output event) Clock source ····· 1/1, 1/4 of system clock frequency; 1/1 of XI oscillation clock frequency; external clock input Interrupt source ····· coincidence with compare register 2 Timer counter 3 : 8-bit × 1 (square-wave output, event count, generation of remote control carrier, serial 0 baud rate timer) Clock source ····· 1/4, 1/16 of system clock frequency; 1/1 of OSC oscillation clock frequency; external clock input Interrupt source ····· coincidence with compare register 3 Timer counter 2, 3 can be cascade-connected. Timer counter 4 : 16-bit × 1 (square-wave/16-bit PWM output, event count, synchronous output event, input capture) Clock source ····· 1/4, 1/16 of system clock frequency; 1/1 of OSC oscillation clock frequency; external clock input Interrupt source ····· coincidence with compare register 4 Time base timer (one-minute count setting, independently operable 8-bit timer counter 5) Clock source ····· 1/4 of system clock frequency; 1/1, 1/8192 of OSC oscillation clock frequency; 1/1, 1/8192 of XI oscillation clock frequency Interrupt source ····· coincidence with compare register 5; 1/8192 prescaler overflow Watchdog timer Interrupt source ····· 1/2097152 of system clock frequency
Serial Interface	Serial 0 : synchronous type/simple UART (half-duplex) × 1 Clock source ····· 1/2, 1/4, 1/16 of system clock frequency; 1/2 of timer counter 3 frequency Serial 1 : synchronous type × 1 Clock source ····· 1/2, 1/8, 1/64 of system clock frequency; 1/2 of timer counter 3 frequency Serial 2 : synchronous type/simple I^2C × 1 Clock source ····· 1/1, 1/2, 1/4 of system clock frequency; 1/2 of timer counter 0 frequency

www.DataSheet4U.com

www.DataSheet4U.com

I/O Pins	**I/O**	36	• Common use : 28 • Specified pull-up resistor available • Input/output selectable (bit unit)
	High Voltage	53	• Output: 29 • I/O: 24 • P-ch open drain (breakdown voltage −30V): FL drive: 53 • Specified pull-down resistor mask option: 35
A/D Inputs		8-bit × 8-ch. (with S/H)	
FL		(35 to 43) segments × (18 to 10) digits	
Special Ports		Buzzer output, remote control carrier signal output	

Electrical Characteristics

Supply current

Parameter	Symbol	Condition	Limit			Unit
			min	typ	max	
Operating supply current	IDD1	fosc = 8 MHz, VDD = 5 V			25	mA
	IDD2	fx = 32 kHz, VDD = 3 V			120	µA
Supply current at HALT	IDD3	fx = 32 kHz, VDD = 3 V			10	µA
Supply current at STOP	IDD4	VDD = 3 V			10	µA

Pin Assignment

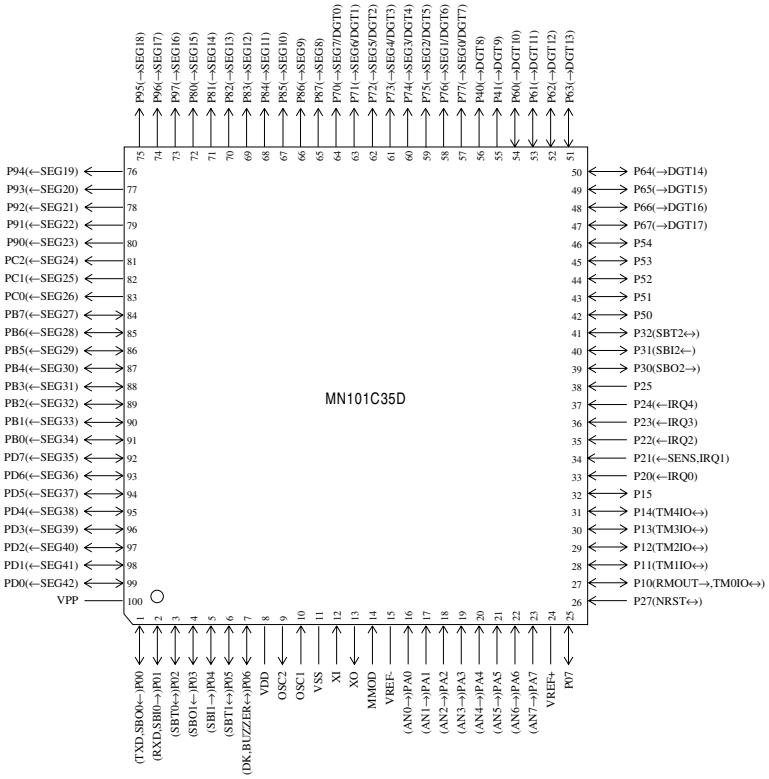

QFP100-P-1818B *Lead-free

See the next page for support tool.

www.DataSheet4U.com

www.DataSheet4U.com

Support Tool

In-circuit Emulator

PX-ICE101C / D + PX-PRB101C35-QFP100-P-1818B

EPROM Built-in Type

Type	MN101CP35D
ROM (× 8-bit)	64 K
RAM (× 8-bit)	2 K
Minimum instruction execution time	0.25 µs (at 2.7 V to 5.5 V, 8 MHz) 125 µs (at 2.7 V to 5.5 V, 32 kHz)
Package	QFP100-P-1818B *Lead-free

www.DataSheet4U.com

www.DataSheet4U.com

www.DataSheet4U.com

www.DataSheet4U.com

❑ MN101C87A , MN101C87D

Type	MN101C87A	MN101C87D (under planning)
ROM (×8-bit)	32 K	64 K
RAM (×8-bit)	1.5 K	2 K
Package	LQFP064-P-1414 *Lead-free	
Minimum Instruction Execution Time	0.1 µs (at 4.5 V to 5.5 V, 20 MHz) 0.24 µs (at 2.7 V to 5.5 V, 8.4 MHz) 0.48 µs (at 2.3 V to 5.5 V, 4.19 MHz) * 0.24 µs (at 2.0 V to 5.5 V, 2.0 MHz)* 62.5 µs (at 2.0 V to 5.5 V, 32 kHz) * * The lower limit for operation guarantee for EEPROM built-in type is 2.5 V	
Interrupts	• RESET • Watchdog • External 0 • External 1 • External 2 • External 3 • External 4 • Timer 0 • Timer 1 • Timer 2 • Timer 3 • Timer 6 • Time base • Timer 7 (2 systems) • Serial 0 (2 systems) • Serial 2 • A/D conversion finish • Automatic transfer finish • FL display key scan • FL display dimmer	
Timer Counter	Timer counter 0 : 8-bit × 1 (square-wave/8-bit PWM output, event count, generation of remote control carrier, simple pulse width measurement) Clock source ····· 1/2, 1/4 of system clock frequency; 1/1, 1/4, 1/16, 1/32, 1/64 of OSC oscillation clock frequency; 1/1 of XI oscillation clock frequency; external clock input Interrupt source ····· coincidence with compare register 0 Timer counter 1 : 8-bit × 1 (square-wave output, event count, serial transfer clock) Clock source ····· 1/2, 1/8 of system clock frequency; 1/1, 1/4, 1/16, 1/64, 1/128 of OSC oscillation clock frequency; 1/1 of XI oscillation clock frequency; external clock input Interrupt source ····· coincidence with compare register 1 Timer counter 0, 1 can be cascade-connected. Timer counter 2 : 8-bit × 1 (square-wave output, PWM output, serial transfer clock, event count, simple pulse width measurement) Clock source ····· 1/2, 1/4 of system clock frequency; 1/1, 1/4, 1/16, 1/32, 1/64 of OSC oscillation clock frequency; 1/1 of XI oscillation clock frequency; external clock input Interrupt source ····· coincidence with compare register 2 Timer counter 3 : 8-bit × 1 (square-wave output, event count, generation of remote control carrier, serial transfer clock) Clock source ····· 1/2, 1/8 of system clock frequency; 1/1, 1/4, 1/16, 1/64, 1/128 of OSC oscillation clock frequency; 1/1 of XI oscillation clock frequency; external clock input Interrupt source ····· coincidence with compare register 3 Timer counter 2, 3 can be cascade-connected. Timer counter 6 : 8-bit freerun timer Clock source ····· 1/1 of system clock frequency; 1/1, 1/128, 1/8192 of OSC oscillation clock frequency; 1/1, 1/128, 1/8192 of XI oscillation clock frequency Interrupt source ····· coincidence with compare register 6 Timer counter 7 : 16-bit × 1 (square-wave output, 16-bit PWM output (cycle / duty continuous variable), event count, pulse width measurement, input capture) Clock source ····· 1/1, 1/2, 1/4, 1/16 of system clock frequency; 1/1, 1/2, 1/4, 1/16 of OSC oscillation clock frequency; 1/1, 1/2, 1/4, 1/16 of external clock input frequency Interrupt source ····· coincidence with compare register 7 (2 lines)	

www.DataSheet4U.com

www.DataSheet4U.com

Timer Counter (Continue)			Time base timer (one-minute count setting) Clock source ····· 1/1 of OSC oscillation clock frequency; 1/1 of XI oscillation clock frequency Interrupt source ····· 1/128, 1/256, 1/512, 1/1024, 1/8192, 1/32768, of clock source frequency Watchdog timer Interrupt source ····· 1/65536, 1/262144, 1/1048576 of system clock frequency
DMA Controller (Automatic Data Transfer)			Max. Transfer cycles : 255 Starting factor : external request, various types of interrupt, software Transfer mode : 1-byte transfer, word transfer, burst transfer
Serial Interface			Serial 0 : synchronous type/UART (full-duplex) × 1 Clock source ····· 1/2, 1/4 of system clock frequency; pulse output of timer counter 1 or 2; 1/2, 1/4, 1/16, 1/64 of OSC oscillation clock frequency, external clock Serial 2 : synchronous type/single-master I²C × 1 Clock source ····· 1/2, 1/4 of system clock frequency; pulse output of timer counter 2 or 3; 1/2, 1/4, 1/16, 1/32 of OSC oscillation clock frequency, external clock
I/O Pins	**I/O**	26	• Common use • Specified pull-up resistor available • Input/output selectable (bit unit)
	High voltage	26	• Output: 18 • I/O: 8 • P-ch. open drain (breakdown voltage −30 V) : FL drive: 26 • Specified pull-down resistor mask option: 16
A/D Inputs			10-bit × 8-ch. (with S/H)
FL			(8 to 16) segments × (18 to 10) digits
Special Ports			Buzzer output, high-current drive port

Pin Assignment

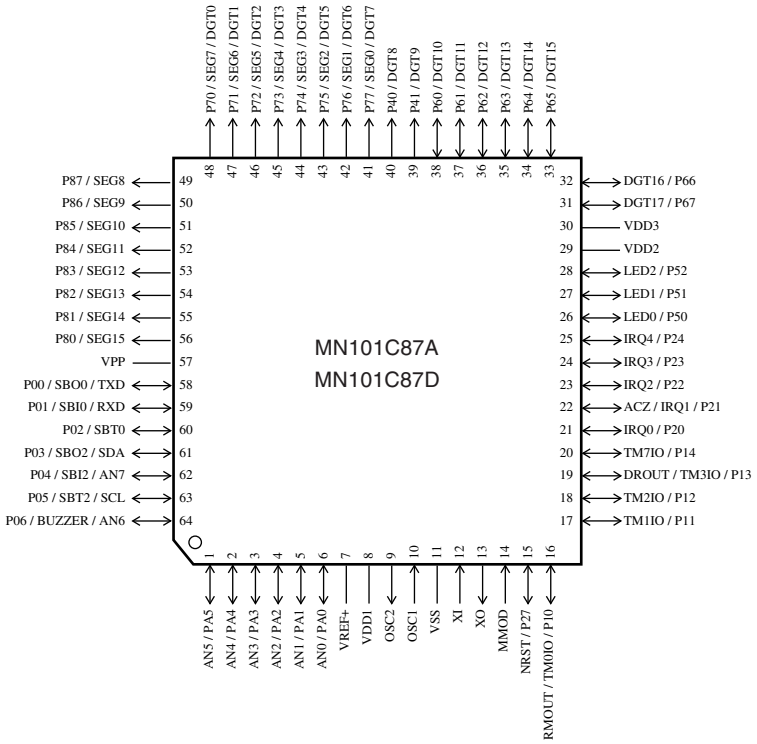

LQFP064-P-1414 *Lead-free

See the next page for pin assignment and support tool.

www.DataSheet4U.com

www.DataSheet4U.com

Support Tool

In-circuit Emulator	PX-ICE101C / D + PX-PRB101C87-LQFP064-P-1414-M	
Flash Memory Built-in Type	Type	MN101CF87G
	ROM (× 8-bit)	128 K
	RAM (× 8-bit)	4 K
	Minimum instruction execution time	0.1 µs (at 4.5 V to 5.5 V, 20 MHz) 0.24 µs (at 2.7 V to 5.5 V, 8.4 MHz) 0.48 µs (at 2.5 V to 5.5 V, 4.19 MHz) 62.5 µs (at 2.5 V to 5.5 V, 32 kHz)
	Package	LQFP064-P-1414 *Lead-free

www.DataSheet4U.com

www.DataSheet4U.com

www.DataSheet4U.com

www.DataSheet4U.com

❑ MN101C88D , MN101C88F , MN101C88G

Type	MN101C88D (under planning)	MN101C88F (under planning)	MN101C88G
ROM (×8-bit)	64 K	96 K	128 K
RAM (×8-bit)	2 K	4 K	4 K
Package	QFP100-P-1818B *Lead-free		
Minimum Instruction Execution Time	0.1 µs (at 4.5 V to 5.5 V, 20 MHz) 0.24 µs (at 2.7 V to 5.5 V, 8.4 MHz) 0.48 µs (at 2.3 V to 5.5 V, 4.19 MHz) * 0.24 µs (at 2.0 V to 5.5 V, 2.0 MHz)* 62.5 µs (at 2.0 V to 5.5 V, 32 kHz) * * The lower limit for operation guarantee for EEPROM built-in type is 2.5 V		
Interrupts	• RESET • Watchdog • External 0 • External 1 • External 2 • External 3 • External 4 • Timer 0 • Timer 1 • Timer 2 • Timer 3 • Timer 6 • Time base • Timer 7 (2 systems) • Serial 0 (2 systems) • Serial 1 (2 systems) • Serial 2 • A/D conversion finish • Automatic transfer finish • FL display key scan • FL display dimmer		

Timer Counter

Timer counter 0 : 8-bit × 1
(square-wave/8-bit PWM output, event count, generation of remote control carrier, simple pulse width measurement)
Clock source ····· 1/2, 1/4 of system clock frequency; 1/1, 1/4, 1/16, 1/32, 1/64 of OSC oscillation clock frequency; 1/1 of XI oscillation clock frequency; external clock input
Interrupt source ····· coincidence with compare register 0

Timer counter 1 : 8-bit × 1 (square-wave output, event count, serial transfer clock)
Clock source ····· 1/2, 1/8 of system clock frequency; 1/1, 1/4, 1/16, 1/64, 1/128 of OSC oscillation clock frequency; 1/1 of XI oscillation clock frequency; external clock input
Interrupt source ····· coincidence with compare register 1

Timer counter 0, 1 can be cascade-connected.

Timer counter 2 : 8-bit × 1
(square-wave output, PWM output, serial transfer clock, event count, simple pulse width measurement)
Clock source ····· 1/2, 1/4 of system clock frequency; 1/1, 1/4, 1/16, 1/32, 1/64 of OSC oscillation clock frequency; 1/1 of XI oscillation clock frequency; external clock input
Interrupt source ····· coincidence with compare register 2

Timer counter 3 : 8-bit × 1
(square-wave output, event count, generation of remote control carrier, serial transfer clock)
Clock source ····· 1/2, 1/8 of system clock frequency; 1/1, 1/4, 1/16, 1/64, 1/128 of OSC oscillation clock frequency; 1/1 of XI oscillation clock frequency; external clock input
Interrupt source ····· coincidence with compare register 3

Timer counter 2, 3 can be cascade-connected.

Timer counter 6 : 8-bit freerun timer
Clock source ····· 1/1 of system clock frequency; 1/1, 1/128, 1/8192 of OSC oscillation clock frequency; 1/1, 1/128, 1/8192 of XI oscillation clock frequency
Interrupt source ····· coincidence with compare register 6

Timer counter 7 : 16-bit × 1
(square-wave output, 16-bit PWM output (cycle / duty continuous variable), event count, pulse width measurement, input capture)
Clock source ····· 1/1, 1/2, 1/4, 1/16 of system clock frequency; 1/1, 1/2, 1/4, 1/16 of OSC oscillation clock frequency; 1/1, 1/2, 1/4, 1/16 of external clock input frequency
Interrupt source ····· coincidence with compare register 7 (2 lines)

www.DataSheet4U.com

www.DataSheet4U.com

Timer Counter (Continue)			Time base timer (one-minute count setting) Clock source ····· 1/1 of OSC oscillation clock frequency; 1/1 of XI oscillation clock frequency Interrupt source ····· 1/128, 1/256, 1/512, 1/1024, 1/8192, 1/32768, of clock source frequency Watchdog timer Interrupt source ····· 1/65536, 1/262144, 1/1048576 of system clock frequency
DMA Controller (Automatic Data Transfer)			Max. Transfer cycles : 255 Starting factor : external request, various types of interrupt, software Transfer mode : 1-byte transfer, word transfer, burst transfer
Serial Interface			Serial 0 : synchronous type/UART (full-duplex) × 1 Clock source ····· 1/2, 1/4 of system clock frequency; pulse output of timer counter 1 or 2; 1/2, 1/4, 1/16, 1/64 of OSC oscillation clock frequency, external clock Serial 1 : synchronous type/UART (full-duplex) × 1 Clock source ····· 1/2, 1/4 of system clock frequency; pulse output of timer counter 1 or 2; 1/2, 1/4, 1/16, 1/64 of OSC oscillation clock frequency, external clock Serial 2 : synchronous type/single-master I^2C × 1 Clock source ····· 1/2, 1/4 of system clock frequency; pulse output of timer counter 2 or 3; 1/2, 1/4, 1/16, 1/32 of OSC oscillation clock frequency, external clock
I/O Pins	**I/O**	35	• Common use • Specified pull-up resistor available • Input/output selectable (bit unit)
	High voltage	53	• Output: 29 • I/O: 24 • P-ch. open drain (breakdown voltage −30 V) : FL drive: 53 • Specified pull-down resistor mask option: 35
A/D Inputs			10-bit × 8-ch. (with S/H)
FL			(35 to 43) segments × (18 to 10) digits
Special Ports			Buzzer output, high-current drive port
ROM Correction			Correcting address designation : up to 3 addresses possible

See the next page for pin assignment and support tool.

www.DataSheet4U.com

www.DataSheet4U.com

Pin Assignment

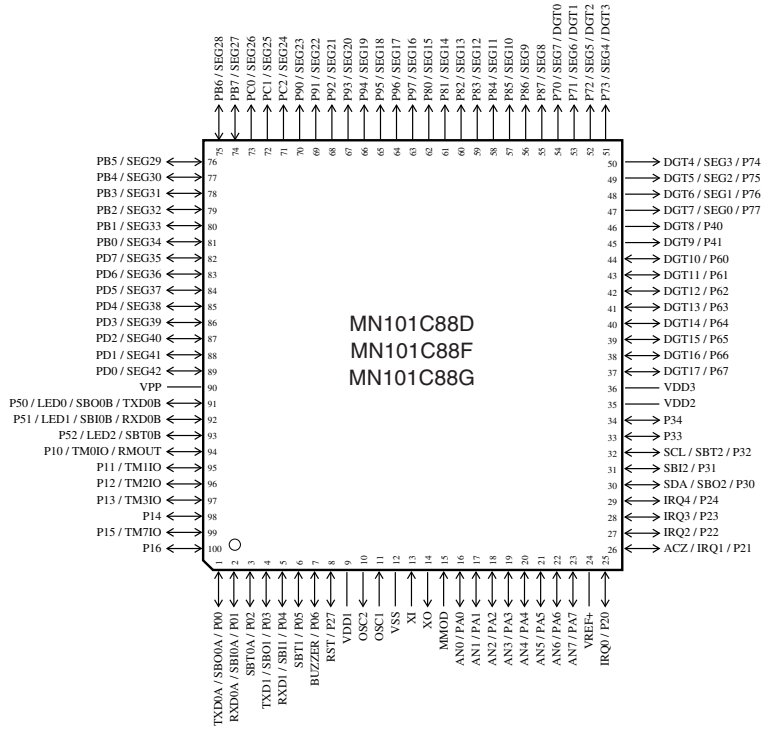

QFP100-P-1818B *Lead-free

Support Tool

In-circuit Emulator

PX-ICE101C / D + PX-PRB101C88-LQFP100-P-1818B-M

Flash Memory Built-in Type

Type	MN101CF88G
ROM (× 8-bit)	128 K
RAM (× 8-bit)	10 K
Minimum instruction execution time	0.1 µs (at 4.5 V to 5.5 V, 20 MHz) 0.24 µs (at 2.7 V to 5.5 V, 8.4 MHz) 0.48 µs (at 2.5 V to 5.5 V, 4.19 MHz) 62.5 µs (at 2.5 V to 5.5 V, 32 kHz)
Package	QFP100-P-1818B *Lead-free

www.DataSheet4U.com

www.DataSheet4U.com

www.DataSheet4U.com

www.DataSheet4U.com

❑ MN101C38A , MN101C38C

Type			MN101C38A	MN101C38C
ROM (×8-bit) External memory can be expanded			32 K	48 K
RAM (×8-bit) External memory can be expanded			1.5 K	2 K
Package			QFP100-P-1818B *Lead-free, LQFP100-P-1414 *Lead-free	
Minimum Instruction Execution Time			0.1 µs (at 4.5 V to 5.5 V, 20 MHz) 0.25 µs (at 2.7 V to 5.5 V, 8 MHz) 125 µs (at 2.0 V to 5.5 V, 32 kHz)* * The lower limit for operation guarantee for EPROM built-in type is 2.3 V.	
Interrupts			• RESET • Watchdog • External 0 • External 1 • External 2 • External 3 • External 4 • Timer 2 • Timer 3 • Timer 4 • Timer 5 • Time base • Serial 0 • Serial 1 • A/D conversion finish	
Timer Counter			Timer counter 2 : 8-bit × 1 (square-wave/8-bit PWM output, event count, synchronous output event) Clock source ····· 1/1, 1/4 of system clock frequency; 1/1 of XI oscillation clock frequency; external clock input Interrupt source ····· coincidence with compare register 2 Timer counter 3 : 8-bit × 1 (square-wave output, event count, generation of remote control carrier, serial 0 baud rate timer) Clock source ····· 1/4, 1/16 of system clock frequency; 1/1 of OSC oscillation clock frequency; external clock input Interrupt source ····· coincidence with compare register 3 Timer counter 2, 3 can be cascade-connected. Timer counter 4 : 16-bit × 1 (square-wave/16-bit PWM output, event count, synchronous output event, input capture) Clock source ····· 1/4, 1/16 of system clock frequency; 1/1 of OSC oscillation clock frequency; external clock input Interrupt source ····· coincidence with compare register 4 Time base timer (one-minute count setting, independently operable 8-bit timer counter 5) Clock source ····· 1/4 of system clock frequency; 1/1, 1/8192 of OSC oscillation clock frequency; 1/1, 1/8192 of XI oscillation clock frequency Interrupt source ····· coincidence with compare register 5; 1/8192 prescaler overflow Watchdog timer Interrupt source ····· 1/65536, 1/262144, 1/1048576 of system clock frequency (mask option)	
Serial Interface			Serial 0 : synchronous type/simple UART (half-duplex) × 1 Clock source ····· 1/2, 1/4, 1/16 of system clock frequency; 1/2 of timer counter 3 frequency Serial 1 : synchronous type × 1 Clock source ····· 1/2, 1/8, 1/64 of system clock frequency; 1/2 of timer counter 3 frequency	
I/O Pins	**I/O**	44	• Common use • Specified pull-up resistor available • Input/output selectable (bit unit) • Specified pull-down resistor partially selectable	
	Input	13	• Common use • Specified pull-up resistor available • Specified pull-down resistor partially selectable	
A/D Inputs			10-bit × 8-ch. (with S/H)	
LCD			52 segments × 4 commons (Static, 1/2, 1/3, or 1/4 duty)	
Special Ports			Buzzer output, remote control carrier signal output, high-current drive port	

www.DataSheet4U.com

www.DataSheet4U.com

Electrical Characteristics

Supply current

Parameter	Symbol	Condition	Limit			Unit
			min	typ	max	
Operating supply current	IDD1	fosc = 8 MHz, VDD = 5 V		10	25	mA
	IDD2	fx = 32 kHz, VDD = 3 V		30	100	µA
Supply current at HALT	IDD3	fx = 32 kHz, VDD = 3 V, Ta = 25°C			8	µA
	IDD4	fx = 32 kHz, VDD = 3 V, Ta = −40°C to +85°C			24	µA
Supply current at STOP	IDD5	VDD = 5 V, Ta = 25°C			1	µA
		VDD = 5 V, Ta = −40°C to +85°C			20	µA

Pin Assignment

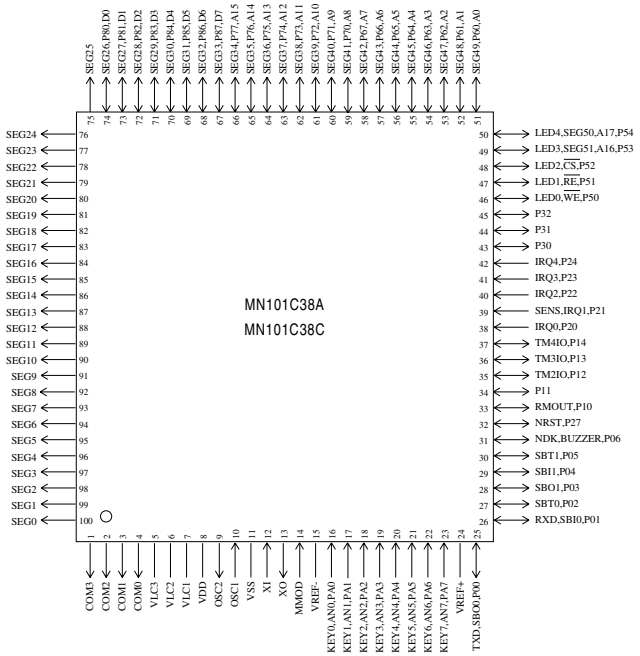

QFP100-P-1818B *Lead-free

LQFP100-P-1414 *Lead-free

Support Tool

In-circuit Emulator	PX-ICE101C / D + PX-PRB101C38-QFP100-P-1818B PX-ICE101C / D + PX-PRB101C38-LQFP100-P-1414	
EPROM Built-in Type	Type	MN101CP38C
	ROM (× 8-bit)	48 K
	RAM (× 8-bit)	2 K
	Minimum instruction execution time	0.1 µs (at 4.5 V to 5.5 V, 20 MHz) 0.25 µs (at 2.7 V to 5.5 V, 8 MHz) 125 µs (at 2.3 V to 5.5 V, 32 kHz)
	Package	QFP100-P-1818B *Lead-free, LQFP100-P-1414 *Lead-free

www.DataSheet4U.com

www.DataSheet4U.com

❑ MN101C39C

Type			MN101C39C
ROM (×8-bit) External memory can be expanded			48 K
RAM (×8-bit) External memory can be expanded			2 K
Package **(Conventional Package)**			TQFP080-P-1212D *Lead-free (TQFP080-P-1212C)
Minimum Instruction Execution Time			0.10 µs (at 4.5 V to 5.5 V, 20 MHz) 0.25 µs (at 2.7 V to 5.5 V, 8 MHz) 125 µs (at 2.0 V to 5.5 V, 32 kHz)* * The lower limit for operation guarantee for EPROM built-in type is 2.3 V.
Interrupts			• RESET • Watchdog • External 0 • External 1 • External 2 • External 3 • External 4 • Timer 2 • Timer 3 • Timer 4 • Timer 5 • Time base • Serial 0 • Serial 1 • A/D conversion finish
Timer Counter			Timer counter 2 : 8-bit × 1 (square-wave/8-bit PWM output, event count, synchronous output event) Clock source ····· 1/1, 1/4 of system clock frequency; 1/1 of XI oscillation clock frequency; external clock input Interrupt source ····· coincidence with compare register 2 Timer counter 3 : 8-bit × 1 (square-wave output, event count, generation of remote control carrier, serial 0 baud rate timer) Clock source ····· 1/4, 1/16 of system clock frequency; 1/1 of OSC oscillation clock frequency; external clock input Interrupt source ····· coincidence with compare register 3 Timer counter 2, 3 can be cascade-connected. Timer counter 4 : 16-bit × 1 (square-wave/16-bit PWM output, event count, synchronous output event, input capture) Clock source ····· 1/4, 1/16 of system clock frequency; 1/1 of OSC oscillation clock frequency; external clock input Interrupt source ····· coincidence with compare register 4 Time base timer (one-minute count setting, independently operable 8-bit timer counter 5) Clock source ····· 1/4 of system clock frequency; 1/1, 1/8192 of OSC oscillation clock frequency; 1/1, 1/8192 of XI oscillation clock frequency Interrupt source ····· coincidence with compare register 5; 1/8192 prescaler overflow Watchdog timer Interrupt source ····· 1/65536, 1/262144, 1/1048576 of system clock frequency (ROM option)
Serial Interface			Serial 0 : synchronous type/simple UART (half-duplex) × 1 Clock source ····· 1/2, 1/4, 1/16 of system clock frequency; 1/2 of timer counter 3 frequency Serial 1 : synchronous type × 1 Clock source ····· 1/2, 1/8, 1/64 of system clock frequency; 1/2 of timer counter 3 frequency
I/O Pins	**I/O**	49	• Common use • Specified pull-up resistor available • Input/output selectable (bit unit) • Specified pull-down resistor partially selectable
	Input	12	• Common use • Specified pull-up resistor available • Specified pull-down resistor partially selectable
A/D Inputs			10-bit × 8-ch. (with S/H)
LCD			28 segments × 4 commons (Static , 1/2, 1/3, or 1/4 duty)
Special Ports			Buzzer output, remote control carrier signal output, high-current drive port

www.DataSheet4U.com

www.DataSheet4U.com

Electrical Characteristics

Supply current

Parameter	Symbol	Condition	Limit			Unit
			min	typ	max	
Operating supply current	IDD1	fosc = 8 MHz, VDD = 5 V		8	25	mA
	IDD2	fx = 32 kHz, VDD = 3 V		18	100	µA
Supply current at HALT	IDD3	fx = 32 kHz, VDD = 3 V, Ta = 25°C		3	8	µA
	IDD4	fx = 32 kHz, VDD = 3 V, Ta = −40°C to +85°C			25	µA
Supply current at STOP	IDD5	VDD = 5 V, Ta = 25°C			1	µA
		VDD = 5 V, Ta = −40°C to +85°C			20	µA

Pin Assignment

( ) : Conventional Package

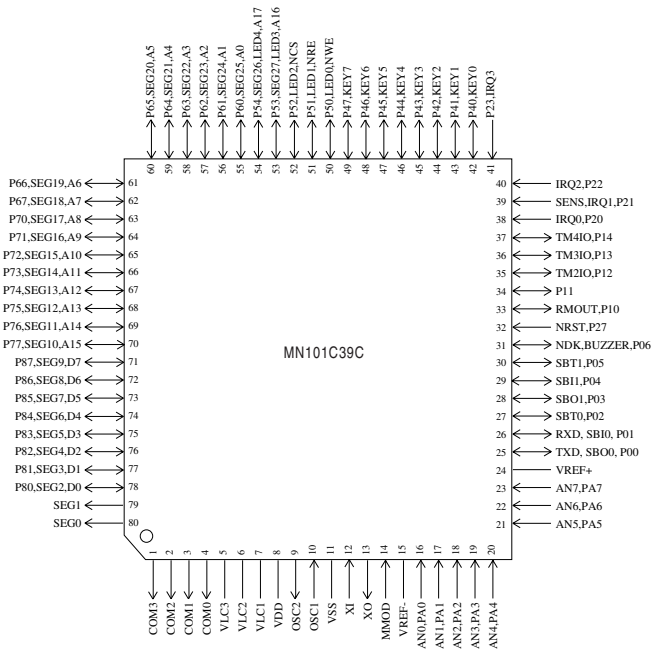

TQFP080-P-1212D *Lead-free

(TQFP080-P-1212C)

Support Tool

In-circuit Emulator	PX-ICE101C / D + PX-PRB101C39-TQFP080-P-1212	
EPROM Built-in Type	Type	MN101CP39C
	ROM (× 8-bit)	48 K
	RAM (× 8-bit)	2 K
	Minimum instruction execution time	0.10 µs (at 4.5 V to 5.5 V, 20 MHz) 0.25 µs (at 2.7 V to 5.5 V, 8 MHz) 125 µs (at 2.3 V to 5.5 V, 32 kHz)*
	Package	TQFP080-P-1212D *Lead-free
	(Conventional Package)	(TQFP080-P-1212C)

www.DataSheet4U.com

www.DataSheet4U.com

❑ MN101C485 , MN101C487

Type			MN101C485	MN101C487
ROM (×8-bit) External memory can be expanded			8 K	16 K
RAM (×8-bit) External memory can be expanded			0.5 K	0.5 K
Package			LQFP064-P-1414 *Lead-free, TQFP064-P-1010B *Lead-free	
Minimum Instruction Execution Time			0.10 µs (at 4.5 V to 5.5 V, 20 MHz) 0.25 µs (at 2.7 V to 5.5 V, 8 MHz) 125 µs (at 2.0 V to 5.5 V, 32 kHz)* * The lower limit for operation guarantee for EPROM built-in type is 2.3 V.	
Interrupts			• RESET • Watchdog • External 0 • External 1 • External 2 • External 4 • Timer 2 • Timer 3 • Timer 4 • Timer 5 • Time base • Serial 0 • A/D conversion finish	
Timer Counter			Timer counter 2 : 8-bit × 1 (square-wave/8-bit PWM output, event count, synchronous output event) Clock source ····· 1/1, 1/4 of system clock frequency; 1/1 of XI oscillation clock frequency; external clock input Interrupt source ····· coincidence with compare register 2 Timer counter 3 : 8-bit × 1 (square-wave output, event count, generation of remote control carrier, serial 0 baud rate timer) Clock source ····· 1/4, 1/16 of system clock frequency; 1/1 of OSC oscillation clock frequency; external clock input Interrupt source ····· coincidence with compare register 3 Timer counter 2, 3 can be cascade-connected. Timer counter 4 : 16-bit × 1 (square-wave/16-bit PWM output, event count, synchronous output event, input capture) Clock source ····· 1/4, 1/16 of system clock frequency; 1/1 of OSC oscillation clock frequency; external clock input Interrupt source ····· coincidence with compare register 4 Time base timer (one-minute count setting, independently operable 8-bit timer counter 5) Clock source ····· 1/4 of system clock frequency; 1/1, 1/8192 of OSC oscillation clock frequency; 1/1, 1/8192 of XI oscillation clock frequency Interrupt source ····· coincidence with compare register 5; 1/8192 prescaler overflow Watchdog timer Interrupt source ····· 1/65536, 1/262144, 1/1048576 of system clock frequency (ROM option)	
Serial Interface			Serial 0 : synchronous type/simple UART (half-duplex) × 1 Clock source ····· 1/2, 1/4, 1/16 of system clock frequency; 1/2 of timer counter 3 frequency	
I/O Pins	**I/O**	36	• Common use • Specified pull-up resistor available • Input/output selectable (bit unit) • Specified pull-down resistor partially selectable	
	Input	11	• Common use • Specified pull-up resistor available • Specified pull-down resistor partially selectable	
A/D Inputs			10-bit × 8-ch. (with S/H)	
LCD			25 segments × 4 commons (Static, 1/2, 1/3, or 1/4 duty)	
Special Ports			Buzzer output, remote control carrier signal output, high-current drive port	

www.DataSheet4U.com

www.DataSheet4U.com

Electrical Characteristics

Supply current

Parameter	Symbol	Condition	Limit			Unit
			min	typ	max	
Operating supply current	IDD1	fosc = 8 MHz, VDD = 5 V		10	25	mA
	IDD2	fx = 32 kHz, VDD = 3 V		15	100	µA
Supply current at HALT	IDD3	fx = 32 kHz, VDD = 3 V, Ta = 25°C		4	8	µA
	IDD4	fx = 32 kHz, VDD = 3 V, Ta = −40°C to +85°C			30	µA
Supply current at STOP	IDD5	VDD = 5 V, Ta = 25°C			1	µA
		VDD = 5 V, Ta = −40°C to +85°C			25	µA

Pin Assignment

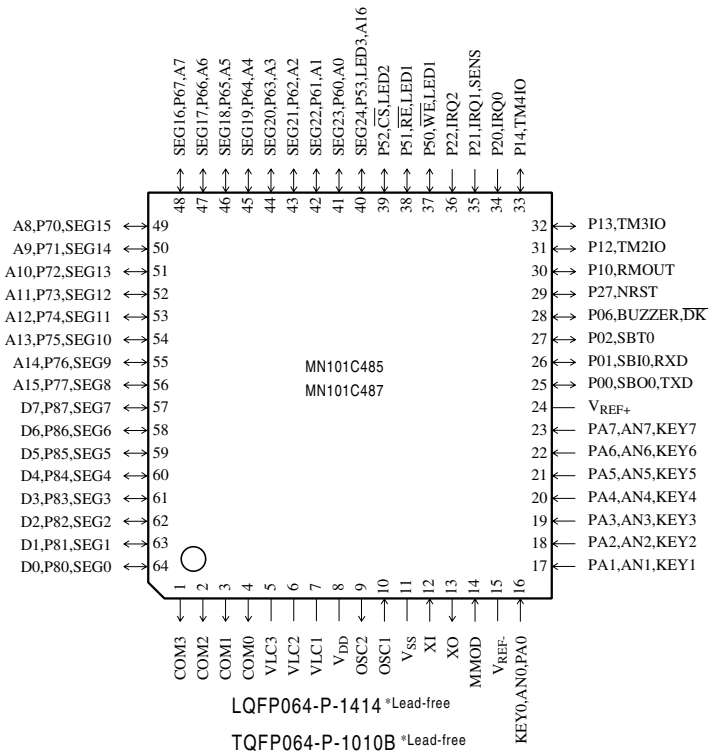

LQFP064-P-1414 *Lead-free

TQFP064-P-1010B *Lead-free

Support Tool

In-circuit Emulator	PX-ICE101C / D + PX-PRB101C48-TQFP064-P-1010B PX-ICE101C / D + PX-PRB101C48-LQFP064-P-1414	
EPROM Built-in Type	Type	MN101CP487
	ROM (× 8-bit)	16 K
	RAM (× 8-bit)	0.5 K
	Minimum instruction execution time	0.10 µs (at 4.5 V to 5.5 V, 20 MHz) 0.25 µs (at 2.7 V to 5.5 V, 8 MHz) 125 µs (at 2.3 V to 5.5 V, 32 KHz)
	Package	LQFP064-P-1414 *Lead-free, TQFP064-P-1010B *Lead-free

www.DataSheet4U.com

www.DataSheet4U.com

❑ MN101C54A, MN101C54C

Type	MN101C54A	MN101C54C
ROM (×8-bit)	32 K	48 K
RAM (×8-bit)	2 K	2 K
Package	QFP084-P-1818E *Lead-free, LQFP080-P-1414A *Lead-free	
Minimum Instruction Execution Time	0.1 µs (at 4.5 V to 5.5 V, 20 MHz) 0.25 µs (at 2.7 V to 5.5 V, 8 MHz)*1 62.5 µs (at 2.0 V to 5.5 V, 32 kHz)*1,2 *1 The lower limit for operation guarantee for flash memory built-in type is 4.5 V. *2 The lower limit for operation guarantee for EPROM built-in type is 2.3 V.	
Interrupts	• RESET • Watchdog • External 0 • External 1 • External 2 • External 3*1 • External 4 (key interrupt dedicated) • Timer 0 • Timer 1 • Timer 2 • Timer 3 • Timer 6 • Time base • Timer 7 (2 systems) • Timer 8 (2 systems) • Serial 0 (2 systems) • Serial 2 • A/D conversion finish *1 LQFP080-P-1414A: Not mounted	
Timer Counter	Timer counter 0 : 8-bit × 1 (square-wave/8-bit PWM output, event count, generation of remote control carrier, simple pulse width measurement) (square-wave/PWM output to large current terminal P50 possible) Clock source ····· 1/2, 1/4 of system clock frequency; 1/1, 1/4, 1/16, 1/32, 1/64 of OSC oscillation clock frequency; 1/1 of XI oscillation clock frequency; external clock input Interrupt source ····· coincidence with compare register 0 Timer counter 1 : 8-bit × 1 (square-wave output, event count, synchronous output event) Clock source ····· 1/2, 1/8 of system clock frequency; 1/1, 1/4, 1/16, 1/8192, 1/32768 of OSC oscillation clock frequency; 1/1 of XI oscillation clock frequency; external clock input Interrupt source ····· coincidence with compare register 1 Timer counter 0, 1 can be cascade-connected. Timer counter 2 : 8-bit × 1 (square-wave output, additional pulse type 10-bit PWM output, event count, synchronous output event, simple pulse width measurement) (square-wave/PWM output to large current terminal P52 possible) Clock source ····· 1/2, 1/4 of system clock frequency; 1/1, 1/4, 1/16, 1/32, 1/64 of OSC oscillation clock frequency; 1/1 of XI oscillation clock frequency; external clock input Interrupt source ····· coincidence with compare register 2 Timer counter 3 : 8-bit × 1 (square-wave output, event count, generation of remote control carrier, serial 0 baud rate timer) Clock source ····· 1/2, 1/8 of system clock frequency; 1/1, 1/4, 1/16, 1/64, 1/128 of OSC oscillation clock frequency; 1/1 of XI oscillation clock frequency; external clock input Interrupt source ····· coincidence with compare register 3 Timer counter 2, 3 can be cascade-connected. Timer counter 6 : 8-bit freerun timer Clock source ····· 1/1 of system clock frequency; 1/1, 1/4096, 1/8192 of OSC oscillation clock frequency; 1/1, 1/4096, 1/8192 of XI oscillation clock frequency Interrupt source ····· coincidence with compare register 6 Timer counter 7 : 16-bit × 1 (square-wave output, IGBT/16-bit PWM output (cycle / duty continuous variable), event count, synchronous output evevt, pulse width measurement, input capture) (square-wave/PWM output to large current terminal P51 possible) Clock source ····· 1/1, 1/2, 1/4, 1/16 of system clock frequency; 1/1, 1/2, 1/4, 1/16 of OSC oscillation clock frequency; 1/1, 1/2, 1/4, 1/16 of external clock input frequency Interrupt source ····· coincidence with compare register 7 (2 lines)	

www.DataSheet4U.com

www.DataSheet4U.com

Timer Counter (Continue)

Timer counter 8: 16 bit × 1
(square-wave/16-bit PWM output [duty continuous variable], event count, pulse width measurement, input capture)
(square-wave/PWM output to large current terminal P53 possible)
Clock source ····· 1/1, 1/2, 1/4, 1/16, 1/128 of system clock frequency;
1/1, 1/2, 1/4, 1/16, 1/128 of OSC oscillation clock frequency;
1/1, 1/2, 1/4, 1/16 of external clock input frequency
Interrupt source ····· coincidence with compare register 8 (2 lines)

Timer counters 7, 8 can be cascade-connected.
(square-wave output, PWM, input capture, pulse width measurement is possible as a 32-bit timer.)

Time base timer (one-minute count setting)
Clock source ····· 1/1 of OSC oscillation clock frequency; 1/1 of XI oscillation clock frequency
Interrupt source ····· 1/128, 1/256, 1/512, 1/1024, 1/8192, 1/32768, of clock source frequency

Watchdog timer
Interrupt source ····· 1/65536, 1/262144, 1/1048576 of system clock frequency

Serial Interface

Serial 0 : synchronous type/UART (full-duplex) × 1
Clock source ····· 1/2, 1/4 of system clock frequency; pulse output of timer counter 3;
1/2, 1/4, 1/16, 1/64 of OSC oscillation clock frequency

Serial 2 : synchronous type × 1
Clock source ····· 1/2, 1/4 of system clock frequency; pulse output of timer counter 3;
1/2, 1/4, 1/16, 1/32 of OSC oscillation clock frequency

I/O Pins	**I/O**	61 (60)	• Common use • Specified pull-up resistor available • Input/output selectable (bit unit) ( ): LQFP080-P-1414A
	Input	4 (3)	• Common use • Specified pull-up resistor available ( ): LQFP080-P-1414A

A/D Inputs

10-bit × 8-ch. (with S/H)

LCD

32 segments × 4 commons (static, 1/2, 1/3, or 1/4 duty)
LCD power supply separated from VDD (usable if VDD ≤ VLCD ≤ 5.5 V)
LCD power step-up circuit contained (3/2, 2 and 3 times)
LCD power shunt resistance contained

Special Ports

Buzzer output, remote control carrier signal output, high-current drive port

Electrical Characteristics

Supply current

Parameter	Symbol	Condition	Limit			Unit
			min	typ	max	
Operating supply current	IDD1	fosc = 20 MHz, VDD = 5 V		25	60	mA
	IDD2	fosc = 8 MHz, VDD = 5 V		10	25	mA
	IDD3	fx = 32 kHz, VDD = 3 V		30	100	µA
Supply current at HALT	IDD4	fx = 32 kHz, VDD = 3 V, Ta = 25°C		4	8	µA
	IDD5	fx = 32 kHz, VDD = 3 V, Ta = −40°C to +85°C			30	µA
Supply current at STOP	IDD6	VDD = 5 V, Ta = 25°C			2	µA
	IDD7	VDD = 5 V, Ta = −40°C to +85°C			50	µA

See the next page for pin assignment and support tool.

www.DataSheet4U.com

www.DataSheet4U.com

Pin Assignment

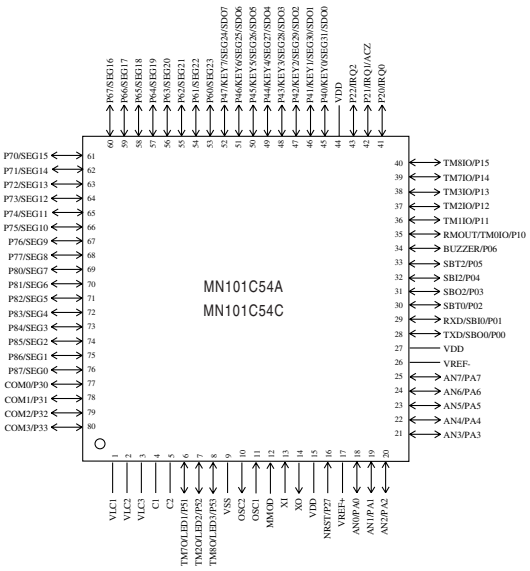

LQFP080-P-1414A *Lead-free

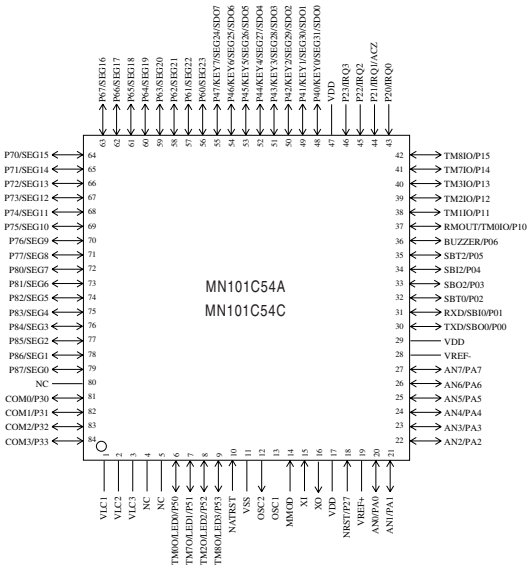

QFP084-P-1818E *Lead-free

Support Tool

In-circuit Emulator	PX-ICE101C / D + PX-PRB101C54-QFP084-P-1818E-M PX-ICE101C / D + PX-PRB101C54-LQFP080-P-1414A-M	
EPROM Built-in Type	Type	MN101CP54C
	ROM (× 8-bit)	48 K
	RAM (× 8-bit)	2 K
	Minimum instruction execution time	0.1 µs (at 4.5 V to 5.5 V, 20 MHz) 0.25 µs (at 2.7 V to 5.5 V, 8 MHz) 62.5 µs (at 2.3 V to 5.5 V, 32 kHz)
	Package	LQFP080-P-1414A *Lead-free, QFP084-P-1818E *Lead-free
Flash Memory Built-in Type	Type	MN101CF54D
	ROM (× 8-bit)	64 K
	RAM (× 8-bit)	2 K
	Minimum instruction execution time	0.1 µs (at 4.5 V to 5.5 V, 20 MHz) 0.25 µs (at 4.5 V to 5.5 V, 8 MHz) 62.5 µs (at 4.5 V to 5.5 V, 32 kHz)
	Package	LQFP080-P-1414A *Lead-free [ES (Engineering Sample) available], QFP084-P-1818E *Lead-free

www.DataSheet4U.com

www.DataSheet4U.com

www.DataSheet4U.com

www.DataSheet4U.com

❑ MN101C57C , MN101C57D

Type	MN101C57C	MN101C57D
ROM (×8-bit)	48 K	64 K
RAM (×8-bit)	2 K	2 K
Package	QFP100-P-1818B *Lead-free	
Minimum Instruction Execution Time	0.1 µs (at 4.5 V to 5.5 V, 20 MHz) 0.25 µs (at 2.7 V to 5.5 V, 8 MHz) 62.5 µs (at 2.0 V to 5.5 V, 32 kHz)* * The lower limit for operation guarantee for flash memory built-in type is 2.5 V.	
Interrupts	• RESET • Watchdog • External 0 • External 1 • External 2 • External 3 • External 4 (key interrupt selectable) • External 5 (key interrupt dedicated) • External 6 • External 7 • Remote control • Timer 0 • Timer 1 • Timer 2 • Timer 3 • Timer 6 • Time base • Timer 7 (2 systems) • Timer 8 (2 systems) • Serial 0 (2 systems) • Serial 2 • A/D conversion finish	

Timer Counter

Timer counter 0 : 8-bit × 1
(square-wave/8-bit PWM output, event count, generation of remote control carrier, simple pulse width measurement) (square-wave/PWM output to large current terminal P50 possible)
- Clock source ····· 1/2, 1/4 of system clock frequency; 1/1, 1/4, 1/16, 1/32, 1/64 of OSC oscillation clock frequency; 1/1 of XI oscillation clock frequency; external clock input
- Interrupt source ····· coincidence with compare register 0

Timer counter 1 : 8-bit × 1 (square-wave output, event count, synchronous output event)
- Clock source ····· 1/2, 1/8 of system clock frequency; 1/1, 1/4, 1/16, 1/8192, 1/32768 of OSC oscillation clock frequency; 1/1 of XI oscillation clock frequency; external clock input
- Interrupt source ····· coincidence with compare register 1

Timer counter 0, 1 can be cascade-connected.

Timer counter 2 : 8-bit × 1
(square-wave output, additional pulse type 10-bit PWM output, event count, synchronous output event, simple pulse width measurement) (square-wave/PWM output to large current terminal P52 possible)
- Clock source ····· 1/2, 1/4 of system clock frequency; 1/1, 1/4, 1/16, 1/32, 1/64 of OSC oscillation clock frequency; 1/1 of XI oscillation clock frequency; external clock input
- Interrupt source ····· coincidence with compare register 2

Timer counter 3 : 8-bit × 1
(square-wave output, event count, generation of remote control carrier, serial 0 baud rate timer)
- Clock source ····· 1/2, 1/8 of system clock frequency; 1/1, 1/4, 1/16, 1/64, 1/128 of OSC oscillation clock frequency; 1/1 of XI oscillation clock frequency; external clock input
- Interrupt source ····· coincidence with compare register 3

Timer counter 2, 3 can be cascade-connected.

Timer counter 6 : 8-bit freerun timer
- Clock source ····· 1/1 of system clock frequency; 1/1, 1/4096, 1/8192 of OSC oscillation clock frequency; 1/1, 1/4096, 1/8192 of XI oscillation clock frequency
- Interrupt source ····· coincidence with compare register 6

Timer counter 7 : 16-bit × 1
(square-wave output, IGBT/16-bit PWM output (cycle / duty continuous variable), event count, synchronous output evevt, pulse width measurement, input capture) (square-wave/PWM output to large current terminal P51 possible)
- Clock source ····· 1/1, 1/2, 1/4, 1/16 of system clock frequency; 1/1, 1/2, 1/4, 1/16 of OSC oscillation clock frequency; 1/1, 1/2, 1/4, 1/16 of external clock input frequency
- Interrupt source ····· coincidence with compare register 7 (2 lines)

www.DataSheet4U.com

www.DataSheet4U.com

Timer Counter (Continue)

Timer counter 8: 16 bit × 1
(square-wave/16-bit PWM output [duty continuous variable], event count, pulse width measurement, input capture)
(square-wave/PWM output to large current terminal P53 possible)
Clock source ····· 1/1, 1/2, 1/4, 1/16, 1/128 of system clock frequency;
1/1, 1/2, 1/4, 1/16, 1/128 of OSC oscillation clock frequency;
1/1, 1/2, 1/4, 1/16 of external clock input frequency
Interrupt source ····· coincidence with compare register 8 (2 lines)

Timer counters 7, 8 can be cascade-connected.
(square-wave output, PWM, input capture, pulse width measurement is possible as a 32-bit timer.)

Time base timer (one-minute count setting)
Clock source ····· 1/1 of OSC oscillation clock frequency; 1/1 of XI oscillation clock frequency
Interrupt source ····· 1/128, 1/256, 1/512, 1/1024, 1/8192, 1/32768 of clock source frequency

Watchdog timer
Interrupt source ····· 1/65536, 1/262144, 1/1048576 of system clock frequency

Serial Interface

Serial 0 : synchronous type/UART (full-duplex) × 1
Clock source ····· 1/2, 1/4 of system clock frequency; 1/2 of pulse output of timer counter 3 frequency ; 1/2, 1/4, 1/16, 1/64 of OSC oscillation clock frequency

Serial 2 : synchronous type × 1
Clock source ····· 1/2, 1/4 of system clock frequency; 1/2 of pulse output of timer counter 3 frequency; 1/2, 1/4, 1/16, 1/32 of OSC oscillation clock frequency

Remote Control Interface

Remote control output: timer 0 and 3 output: the remote control carrier output of 1/2 and 1/3 duty.
Remote control reception: correspondence with low speed clock waiting
Correspondence with AEHA (Association for Electric Home Appliances) format
(selection of a formart is available by the set-up)

I/O Pins	**I/O**	77	• Common use • Specified pull-up resistor available • Input/output selectable (bit unit)
	Input	6	• Common use • Specified pull-up resistor available

A/D Inputs

10-bit × 16-ch. (with S/H)

LCD

47 segments × 4 commons (static, 1/2, 1/3, or 1/4 duty)
LCD power supply separated from VDD (usable if VLCD ≤ VDD)
LCD power shunt resistance contained

Special Ports

Buzzer output, remote control carrier signal output, high-current drive port

Electrical Characteristics

Supply current

Parameter	Symbol	Condition	Limit			Unit
			min	typ	max	
Operating supply current	IDD1	fosc = 20 MHz, VDD = 5 V		15	30	mA
	IDD2	fosc = 8 MHz, VDD = 5 V		8	16	mA
	IDD3	fx = 32 kHz, VDD = 3 V		30	60(70)	µA
Supply current at HALT	IDD4	fx = 32 kHz, VDD = 3 V, Ta = 25°C		4	8	µA
	IDD5	fx = 32 kHz, VDD = 3 V, Ta = −40°C to +85°C			30	µA
Supply current at STOP	IDD6	VDD = 5 V, Ta = 25°C			2	µA
	IDD7	VDD = 5 V, Ta = −40°C to +85°C			50	µA

( ) : Flash memory built-in type.

See the next page for pin assignment and support tool.

www.DataSheet4U.com

www.DataSheet4U.com

Pin Assignment

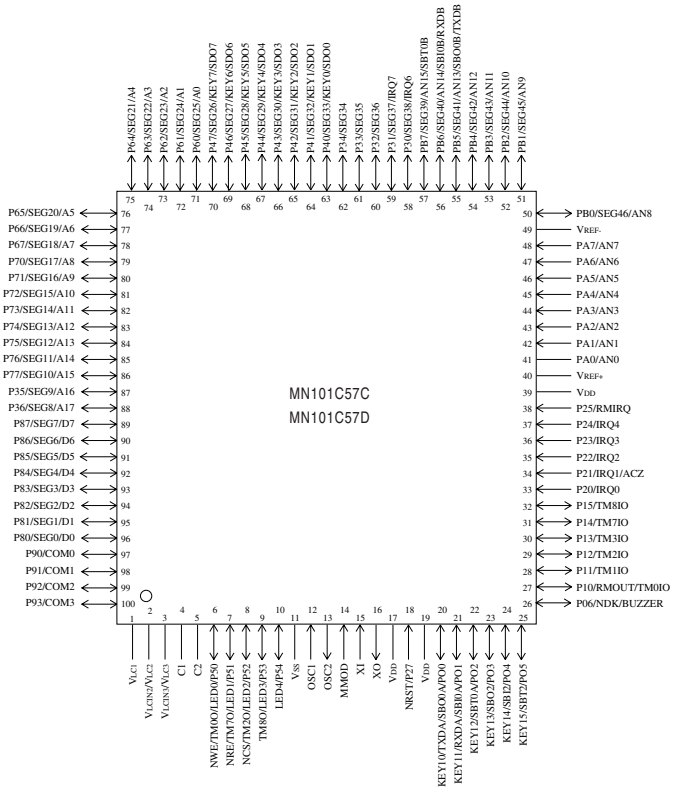

QFP100-P-1818B *Lead-free

Support Tool

In-circuit Emulator	PX-ICE101C / D + PX-PRB101C57-QFP100-P-1818B-M	
Flash Memory Built-in Type	Type	MN101CF57D
	ROM (× 8-bit)	64 K
	RAM (× 8-bit)	2 K
	Minimum instruction execution time	0.1 µs (at 4.5 V to 5.5 V, 20 MHz) 0.25 µs (at 2.7 V to 5.5 V, 8 MHz) 62.5 µs (at 2.5 V to 5.5 V, 32 kHz)
	Package	QFP100-P-1818B *Lead-free

www.DataSheet4U.com

www.DataSheet4U.com

www.DataSheet4U.com

www.DataSheet4U.com

❑ MN101C589 , MN101C58A

Type	MN101C589	MN101C58A
ROM (×8-bit)	24 K	32 K
RAM (×8-bit)	1.5 K	1.5 K
Package	LQFP064-P-1414 *Lead-free	
Minimum Instruction Execution Time	0.1 µs (at 4.5 V to 5.5 V, 20 MHz) 0.25 µs (at 2.7 V to 5.5 V, 8 MHz)*1 62.5 µs (at 2.0 V to 5.5 V, 32 kHz)*1,2	
Interrupts	• RESET • Watchdog • External 0 • External 1 • External 2 • External 4 (key interrupt dedicated) • Timer 0 • Timer 1 • Timer 2 • Timer 3 • Timer 6 • Time base • Timer 7 (2 systems) • Timer 8 (2 systems) • Serial 0 (2 systems) • A/D conversion finish	

*1 The lower limit for operation guarantee for flash memory built-in type is 4.5 V.

*2 The lower limit for operation guarantee for EPROM built-in type is 2.3 V.

Timer Counter

Timer counter 0 : 8-bit × 1
(square-wave/8-bit PWM output, event count, generation of remote control carrier, simple pulse width measurement) (square-wave/PWM output to large current terminal P50 possible)
- Clock source ····· 1/2, 1/4 of system clock frequency; 1/1, 1/4, 1/16, 1/32, 1/64 of OSC oscillation clock frequency; 1/1 of XI oscillation clock frequency; external clock input
- Interrupt source ····· coincidence with compare register 0

Timer counter 1 : 8-bit × 1 (square-wave output, event count, synchronous output event)
- Clock source ····· 1/2, 1/8 of system clock frequency; 1/1, 1/4, 1/16, 1/8192, 1/32768 of OSC oscillation clock frequency; 1/1 of XI oscillation clock frequency; external clock input
- Interrupt source ····· coincidence with compare register 1

Timer counter 0, 1 can be cascade-connected.

Timer counter 2 : 8-bit × 1
(square-wave output, additional pulse type 10-bit PWM output, event count, synchronous output event, simple pulse width measurement) (square-wave/PWM output to large current terminal P52 possible)
- Clock source ····· 1/2, 1/4 of system clock frequency; 1/1, 1/4, 1/16, 1/32, 1/64 of OSC oscillation clock frequency; 1/1 of XI oscillation clock frequency; external clock input
- Interrupt source ····· coincidence with compare register 2

Timer counter 3 : 8-bit × 1
(square-wave output, event count, generation of remote control carrier, serial 0 baud rate timer)
- Clock source ····· 1/2, 1/8 of system clock frequency; 1/1, 1/4, 1/16, 1/64, 1/128 of OSC oscillation clock frequency; 1/1 of XI oscillation clock frequency; external clock input
- Interrupt source ····· coincidence with compare register 3

Timer counter 2, 3 can be cascade-connected.

Timer counter 6 : 8-bit freerun timer
- Clock source ····· 1/1 of system clock frequency; 1/1, 1/4096, 1/8192 of OSC oscillation clock frequency; 1/1, 1/4096, 1/8192 of XI oscillation clock frequency
- Interrupt source ····· coincidence with compare register 6

Timer counter 7 : 16-bit × 1
(square-wave output, IGBT/16-bit PWM output (cycle / duty continuous variable), event count, synchronous output evevt, pulse width measurement, input capture) (square-wave/PWM output to large current terminal P51 possible)
- Clock source ····· 1/1, 1/2, 1/4, 1/16 of system clock frequency; 1/1, 1/2, 1/4, 1/16 of OSC oscillation clock frequency; 1/1, 1/2, 1/4, 1/16 of external clock input frequency
- Interrupt source ····· coincidence with compare register 7 (2 lines)

Timer counter 8: 16 bit × 1
(square-wave/16-bit PWM output [duty continuous variable], event count, pulse width measurement, input capture) (square-wave/PWM output to large current terminal P53 possible)

www.DataSheet4U.com

www.DataSheet4U.com

Timer Counter (Continue)

Clock source ····· 1/1, 1/2, 1/4, 1/16, 1/128 of system clock frequency;
1/1, 1/2, 1/4, 1/16, 1/128 of OSC oscillation clock frequency;
1/1, 1/2, 1/4, 1/16 of external clock input frequency
Interrupt source ····· coincidence with compare register 8 (2 lines)

Timer counters 7, 8 can be cascade-connected.
(square-wave output, PWM, input capture, pulse width measurement is possible as a 32-bit timer.)

Time base timer (one-minute count setting)
Clock source ····· 1/1 of OSC oscillation clock frequency; 1/1 of XI oscillation clock frequency
Interrupt source ····· 1/128, 1/256, 1/512, 1/1024, 1/8192, 1/32768, of clock source frequency

Watchdog timer
Interrupt source ····· 1/65536, 1/262144, 1/1048576 of system clock frequency

Serial Interface

Serial 0 : synchronous type/UART (full-duplex) × 1
Clock source ····· 1/2, 1/4 of system clock frequency; pulse output of timer counter 3;
1/2, 1/4, 1/16, 1/64 of OSC oscillation clock frequency

I/O Pins	**I/O**	46	• Common use • Specified pull-up resistor available • Input/output selectable (bit unit)
	Input	3	• Common use • Specified pull-up resistor available

A/D Inputs

10-bit × 8-ch. (with S/H)

LCD

24 segments × 4 commons (static, 1/2, 1/3, or 1/4 duty)
LCD power supply separated from VDD (usable if VDD ≤ VLCD ≤ 5.5 V)
LCD power step-up circuit contained (3/2, 2 and 3 times)
LCD power shunt resistance contained

Special Ports

Buzzer output, remote control carrier signal output, high-current drive port

Electrical Characteristics

Supply current

Parameter	Symbol	Condition	Limit			Unit
			min	typ	max	
Operating supply current	IDD1	fosc = 20 MHz, VDD = 5 V		25	60	mA
	IDD2	fosc = 8 MHz, VDD = 5 V		10	25	mA
	IDD3	fx = 32 kHz, VDD = 3 V		30	100	µA
Supply current at HALT	IDD4	fx = 32 kHz, VDD = 3 V, Ta = 25°C		4	8	µA
	IDD5	fx = 32 kHz, VDD = 3 V, Ta = −40°C to +85°C			30	µA
Supply current at STOP	IDD6	VDD = 5 V, Ta = 25°C			2	µA
	IDD7	VDD = 5 V, Ta = −40°C to +85°C			50	µA

See the next page for pin assignment and support tool.

www.DataSheet4U.com

www.DataSheet4U.com

Pin Assignment

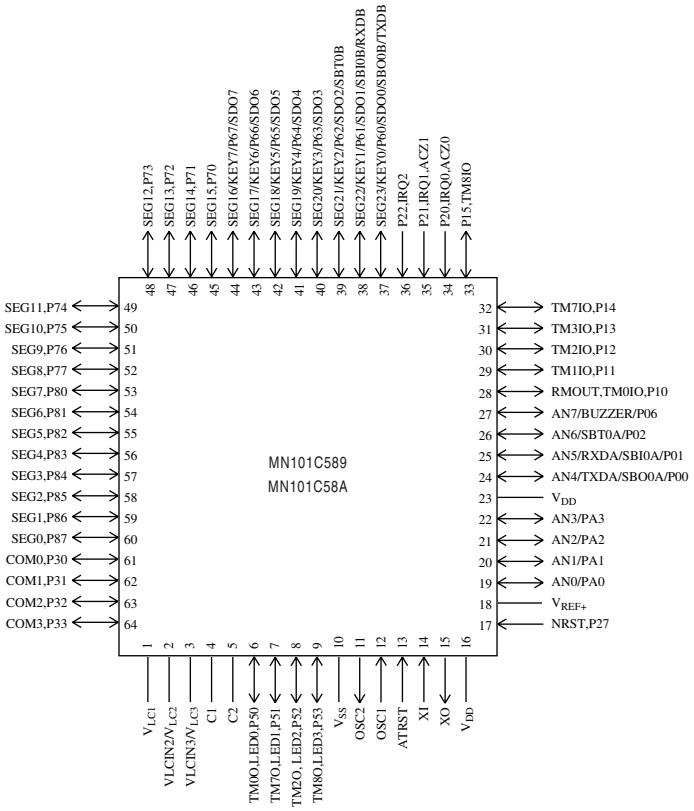

LQFP064-P-1414 *Lead-free

Support Tool

In-circuit Emulator	PX-ICE101C / D + PX-PRB101C58-LQFP064-P-1414-M	
EPROM Built-in Type	Type	MN101CP58A
	ROM (× 8-bit)	32 K
	RAM (× 8-bit)	1.5 K
	Minimum instruction execution time	0.1 µs (at 4.5 V to 5.5 V, 20 MHz) 0.25 µs (at 2.7 V to 5.5 V, 8 MHz) 62.5 µs (at 2.3 V to 5.5 V, 32 kHz)
	Package	LQFP064-P-1414 *Lead-free
Flash Memory Built-in Type	Type	MN101CF58D
	ROM (× 8-bit)	64 K
	RAM (× 8-bit)	2 K
	Minimum instruction execution time	0.1 µs (at 4.5 V to 5.5 V, 20 MHz) 0.25 µs (at 4.5 V to 5.5 V, 8 MHz) 62.5 µs (at 4.5 V to 5.5 V, 32 kHz)
	Package	LQFP064-P-1414 *Lead-free

www.DataSheet4U.com

www.DataSheet4U.com

www.DataSheet4U.com

www.DataSheet4U.com

❑ MN101C66D, MN101C66G

Type	MN101C66D	MN101C66G [ES (Engineering Sample) available]
ROM (×8-bit)	64 K	128 K
RAM (×8-bit)	2 K	4 K
Package	QFP084-P-1818E *Lead-free, LQFP080-P-1414A *Lead-fre	
Minimum Instruction Execution Time	0.1 µs (at 4.5 V to 5.5 V, 20 MHz) 0.25 µs (at 2.7 V to 5.5 V, 8 MHz) 62.5 µs (at 2.0 V to 5.5 V, 32 kHz)*1 *1 The lower limit for operation guarantee for flash memory built-in type is 2.5 V. The lower limit for operation guarantee for EPROM built-in type is 2.3 V.	
Interrupts	• RESET • Watchdog • External 0 • External 1 • External 2 • External 3*1 • External 4 (key interrupt dedicated) • Timer 0 • Timer 1 • Timer 2 • Timer 3 • Timer 6 • Time base • Timer 7 (2 systems) • Timer 8 (2 systems) • Serial 0 (2 systems) • Serial 2 • A/D conversion finish *1 LQFP080-P-1414A: Not mounted	

Timer Counter

Timer counter 0 : 8-bit × 1
(square-wave/8-bit PWM output, event count, generation of remote control carrier, simple pulse width measurement) (square-wave/PWM output to large current terminal P50 possible)
- Clock source ····· 1/2, 1/4 of system clock frequency; 1/1, 1/4, 1/16, 1/32, 1/64 of OSC oscillation clock frequency; 1/1 of XI oscillation clock frequency; external clock input
- Interrupt source ····· coincidence with compare register 0

Timer counter 1 : 8-bit × 1 (square-wave output, event count, synchronous output event)
- Clock source ····· 1/2, 1/8 of system clock frequency; 1/1, 1/4, 1/16, 1/8192, 1/32768 of OSC oscillation clock frequency; 1/1 of XI oscillation clock frequency; external clock input
- Interrupt source ····· coincidence with compare register 1

Timer counter 0, 1 can be cascade-connected.

Timer counter 2 : 8-bit × 1
(square-wave output, additional pulse type 10-bit PWM output, event count, synchronous output event, simple pulse width measurement) (square-wave/PWM output to large current terminal P52 possible)
- Clock source ····· 1/2, 1/4 of system clock frequency; 1/1, 1/4, 1/16, 1/32, 1/64 of OSC oscillation clock frequency; 1/1 of XI oscillation clock frequency; external clock input
- Interrupt source ····· coincidence with compare register 2

Timer counter 3 : 8-bit × 1
(square-wave output, event count, generation of remote control carrier, serial 0 baud rate timer)
- Clock source ····· 1/2, 1/8 of system clock frequency; 1/1, 1/4, 1/16, 1/64, 1/128 of OSC oscillation clock frequency; 1/1 of XI oscillation clock frequency; external clock input
- Interrupt source ····· coincidence with compare register 3

Timer counter 2, 3 can be cascade-connected.

Timer counter 6 : 8-bit freerun timer
- Clock source ····· 1/1 of system clock frequency; 1/1, 1/4096, 1/8192 of OSC oscillation clock frequency; 1/1, 1/4096, 1/8192 of XI oscillation clock frequency
- Interrupt source ····· coincidence with compare register 6

Timer counter 7 : 16-bit × 1
(square-wave output, IGBT/16-bit PWM output (cycle / duty continuous variable), event count, synchronous output evevt, pulse width measurement, input capture) (square-wave/PWM output to large current terminal P51 possible)
- Clock source ····· 1/1, 1/2, 1/4, 1/16 of system clock frequency; 1/1, 1/2, 1/4, 1/16 of OSC oscillation clock frequency; 1/1, 1/2, 1/4, 1/16 of external clock input frequency
- Interrupt source ····· coincidence with compare register 7 (2 lines)

www.DataSheet4U.com

www.DataSheet4U.com

Timer Counter (Continue)

Timer counter 8: 16 bit × 1
(square-wave/16-bit PWM output [duty continuous variable], event count, pulse width measurement, inputcapture)
(square-wave/PWM output to large current terminal P53 possible)
Clock source ····· 1/1, 1/2, 1/4, 1/16, 1/128 of system clock frequency;
1/1, 1/2, 1/4, 1/16, 1/128 of OSC oscillation clock frequency;
1/1, 1/2, 1/4, 1/16 of external clock input frequency
Interrupt source ····· coincidence with compare register 8 (2 lines)

Timer counters 7, 8 can be cascade-connected.
(square-wave output, PWM, input capture, pulse width measurement is possible as a 32-bit timer.)

Time base timer (one-minute count setting)
Clock source ····· 1/1 of OSC oscillation clock frequency; 1/1 of XI oscillation clock frequency
Interrupt source ····· 1/128, 1/256, 1/512, 1/1024, 1/8192, 1/32768 of clock source frequency

Watchdog timer
Interrupt source ····· 1/65536, 1/262144, 1/1048576 of system clock frequency

Serial Interface

Serial 0 : synchronous type/UART (full-duplex) × 1
Clock source ····· 1/2, 1/4 of system clock frequency; pulse output of timer counter 3;
1/2, 1/4, 1/16, 1/64 of OSC oscillation clock frequency

Serial 2 : synchronous type × 1
Clock source ····· 1/2, 1/4 of system clock frequency; pulse output of timer counter 3;
1/2, 1/4, 1/16, 1/32 of OSC oscillation clock frequency

I/O Pins	**I/O**	61 (60)	• Common use • Specified pull-up resistor available • Input/output selectable (bit unit) ( ): LQFP080-P-1414A
	Input	4 (3)	• Common use • Specified pull-up resistor available ( ): LQFP080-P-1414A

A/D Inputs

10-bit × 8-ch. (with S/H)

LCD

32 segments × 4 commons (static, 1/2, 1/3, or 1/4 duty)
LCD power supply separated from VDD (usable if VLCD ≤VDD)
LCD power shunt resistance contained

Special Ports

Buzzer output, remote control carrier signal output, high-current drive port

Electrical Characteristics

Supply current

Parameter	Symbol	Condition	Limit			Unit
			min	typ	max	
Operating supply current	IDD1	fosc = 20 MHz, VDD = 5 V		25	60	mA
	IDD2	fosc = 8 MHz, VDD = 5 V		10	25	mA
	IDD3	fx = 32 kHz, VDD = 3 V		30	100	µA
Supply current at HALT	IDD4	fx = 32 kHz, VDD = 3 V, Ta = 25°C		4	8	µA
	IDD5	fx = 32 kHz, VDD = 3 V, Ta = −40°C to +85°C			30	µA
Supply current at STOP	IDD6	VDD = 5 V, Ta = 25°C			2	µA
	IDD7	VDD = 5 V, Ta = −40°C to +85°C			50	µA

See the next page for pin assignment and support tool.

www.DataSheet4U.com

www.DataSheet4U.com

Pin Assignment

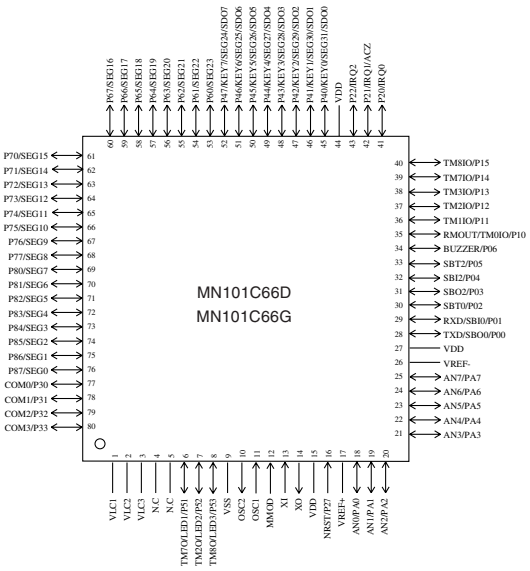

LQFP080-P-1414A *Lead-free

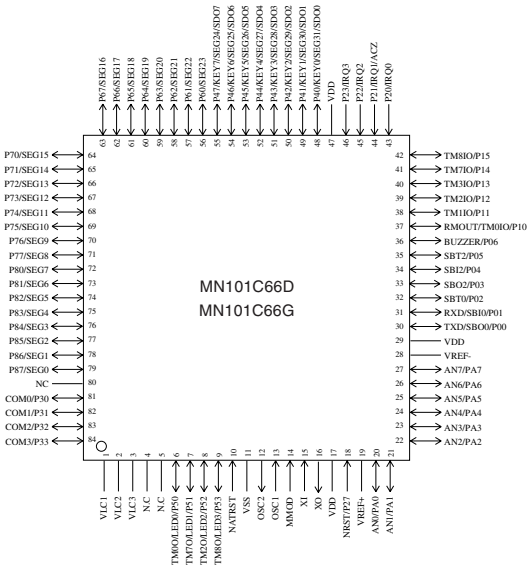

QFP084-P-1818E *Lead-free

Support Tool

In-circuit Emulator	PX-ICE101C / D + PX-PRB101C66-QFP084-P-1818E-M PX-ICE101C / D + PX-PRB101C66-LQFP080-P-1414A-M	
EPROM Built-in Type	Type	MN101CP66D
	ROM (× 8-bit)	64 K
	RAM (× 8-bit)	2 K
	Minimum instruction execution time	0.1 µs (at 4.5 V to 5.5 V, 20 MHz) 0.25 µs (at 2.7 V to 5.5 V, 8 MHz) 62.5 µs (at 2.3 V to 5.5 V, 32 kHz)
	Package	LQFP080-P-1414A *Lead-free, QFP084-P-1818E *Lead-free
Flash Memory Built-in Type	Type	MN101CF66G
	ROM (× 8-bit)	128 K
	RAM (× 8-bit)	4 K
	Minimum instruction execution time	0.1 µs (at 4.5 V to 5.5 V, 20 MHz) 0.25 µs (at 2.7 V to 5.5 V, 8 MHz) 62.5 µs (at 2.5 V to 5.5 V, 32 kHz)
	Package	LQFP080-P-1414A *Lead-free, QFP084-P-1818E *Lead-free

www.DataSheet4U.com

www.DataSheet4U.com

www.DataSheet4U.com

www.DataSheet4U.com

❑ MN101C70C

Type	MN101C70C
ROM (×8-bit)	48 K
RAM (×8-bit)	2 K
Package	LQFP080-P-1414A *Lead-free, TQFP080-P-1212D *Lead-free (under planning)
Minimum Instruction Execution Time	0.1 µs (at 3.0 V to 3.6 V, 10 MHz) 0.235 µs (at 1.8 V to 3.6 V, 4.25 MHz) 62.5 µs (at 1.8 V to 3.6 V, 32 kHz) * The lower limit for operation guarantee for flash memory built-in type is 2.2 V.
Interrupts	• RESET • Watchdog • External 0 • External 1 • External 2 • External 4 (key interrupt dedicated) • Timer 0 • Timer 1 • Timer 2 • Timer 3 • Timer 6 • Time base • Timer 7 (2 systems) • Timer 8 (2 systems) • Serial 0 (2 systems) • Serial 2 • A/D conversion finish • Automatic transfer finish
Timer Counter	Timer counter 0 : 8-bit × 1 (square-wave/8-bit PWM output, event count, generation of remote control carrier, simple pulse width measurement, added pluse (2-bit) system PWM output, real time output control) (square-wave/PWM output to large current terminal P50 possible) Clock source ····· 1/2, 1/4 of system clock frequency; 1/1, 1/4, 1/16, 1/32, 1/64 of OSC oscillation clock frequency; 1/1 of XI oscillation clock frequency; external clock input Interrupt source ····· coincidence with compare register 0 Timer counter 1 : 8-bit × 1 (square-wave output, event count, synchronous output event) Clock source ····· 1/2, 1/8 of system clock frequency; 1/1, 1/4, 1/16, 1/64, 1/128 of OSC oscillation clock frequency; 1/1 of XI oscillation clock frequency; external clock input Interrupt source ····· coincidence with compare register 1 Timer counter 0, 1 can be cascade-connected. Timer counter 2 : 8-bit × 1 (square-wave output, added pluse (2-bit) system PWM output, PWM output, serial transfer clock output, real time output control, event count, synchronous output event, simple pulse width measurement) (square-wave/PWM output to large current terminal P52 possible) Clock source ····· 1/2, 1/4 of system clock frequency; 1/1, 1/4, 1/16, 1/32, 1/64 of OSC oscillation clock frequency; 1/1 of XI oscillation clock frequency; external clock input Interrupt source ····· coincidence with compare register 2 Timer counter 3 : 8-bit × 1 (square-wave output, event count, generation of remote control carrier, serial transfer clock) Clock source ····· 1/2, 1/8 of system clock frequency; 1/1, 1/4, 1/16, 1/64, 1/128 of OSC oscillation clock frequency; 1/1 of XI oscillation clock frequency; external clock input Interrupt source ····· coincidence with compare register 3 Timer counter 2, 3 can be cascade-connected. Timer counter 6 : 8-bit freerun timer Clock source ····· 1/1 of system clock frequency; 1/1, 1/128, 1/8192 of OSC oscillation clock frequency; 1/1, 1/128, 1/8192 of XI oscillation clock frequency Interrupt source ····· coincidence with compare register 6 Timer counter 7 : 16-bit × 1 (square-wave output, 16-bit PWM output (cycle / duty continuous variable), event count, synchronous output event, pulse width measurement, input capture, real time output control, high performance IGBT output (Cycle/Duty can be changed constantly)) (square-wave/PWM output to large current terminal P51 possible) Clock source ····· 1/1, 1/2, 1/4, 1/16 of system clock frequency; 1/1, 1/2, 1/4, 1/16 of OSC oscillation clock frequency; 1/1, 1/2, 1/4, 1/16 of external clock input frequency Interrupt source ····· coincidence with compare register 7 (2 lines), input capture register

www.DataSheet4U.com

www.DataSheet4U.com

Timer Counter (Continue)	Timer counter 8: 16 bit × 1 (square-wave/16-bit PWM output [duty continuous variable], event count, pulse width measurement, input capture) (square-wave/PWM output to large current terminal P53 possible) Clock source ····· 1/1, 1/2, 1/4, 1/16 of system clock frequency; 1/1, 1/2, 1/4, 1/16 of OSC oscillation clock frequency; 1/1, 1/2, 1/4, 1/16 of external clock input frequency Interrupt source ····· coincidence with compare register 8 (2 lines), input capture register Timer counters 7, 8 can be cascade-connected. (square-wave output, PWM is possible as a 32-bit timer.) Time base timer (one-minute count setting) Clock source ····· 1/1 of OSC oscillation clock frequency; 1/1 of XI oscillation clock frequency Interrupt source ····· 1/128, 1/256, 1/512, 1/1024, 1/8192, 1/32768, of clock source frequency Watchdog timer Interrupt source ····· 1/65536, 1/262144, 1/1048576 of system clock frequency
DMA Controller (Automatic Data Transfer)	Max. Transfer cycles : 255 Starting factor : external request, various types of interrupt, software Transfer mode : 1-byte transfer, word transfer, burst transfer
Serial Interface	Serial 0 : synchronous type/UART (full-duplex) × 1 Clock source ····· 1/2, 1/4 of system clock frequency; pulse output of timer counter 2 or 3; 1/2, 1/4, 1/16, 1/64 of OSC oscillation clock frequency, external clock Serial 2 : synchronous type/single-master I^2C × 1 Clock source ····· 1/2, 1/4 of system clock frequency; pulse output of timer counter 2 or 3; 1/2, 1/4, 1/16, 1/32 of OSC oscillation clock frequency, external clock
I/O Pins — **I/O** — 66	• Common use • Specified pull-up resistor available • Input/output selectable (bit unit)
A/D Inputs	10-bit × 16-ch. (with S/H)
LCD	32 segments × 4 commons (static, 1/2, 1/3, or 1/4 duty) LCD power supply separated from VDD (usable if VDD ≤ VLCD ≤ 3.6 V) LCD power step-up circuit contained (3/2, 2 and 3 times) LCD power shunt resistance contained LCD reference voltage is contained.
Special Ports	Buzzer output, remote control carrier signal output, high-current drive port
ROM Correction	Correcting address designation : up to 3 addresses possible

Electrical Characteristics

Supply current

Parameter	Symbol	Condition	Limit			Unit
			min	typ	max	
Operating supply current	IDD1	fosc = 4 MHz, VDD = 3 V		1	1.8	mA
	IDD2	fx = 32 kHz, VDD = 3 V		4	15	µA
Supply current at HALT	IDD3	fx = 32 kHz, VDD = 3 V, Ta = 25°C		2	5	µA
	IDD4	fx = 32 kHz, VDD = 3 V, Ta = −40°C to +85°C			10	µA
Supply current at STOP	IDD5	VDD = 3 V, Ta = 25°C			2	µA
	IDD6	VDD = 3 V, Ta = −40°C to +85°C			8	µA

See the next page for pin assignment and support tool.

www.DataSheet4U.com

www.DataSheet4U.com

Pin Assignment

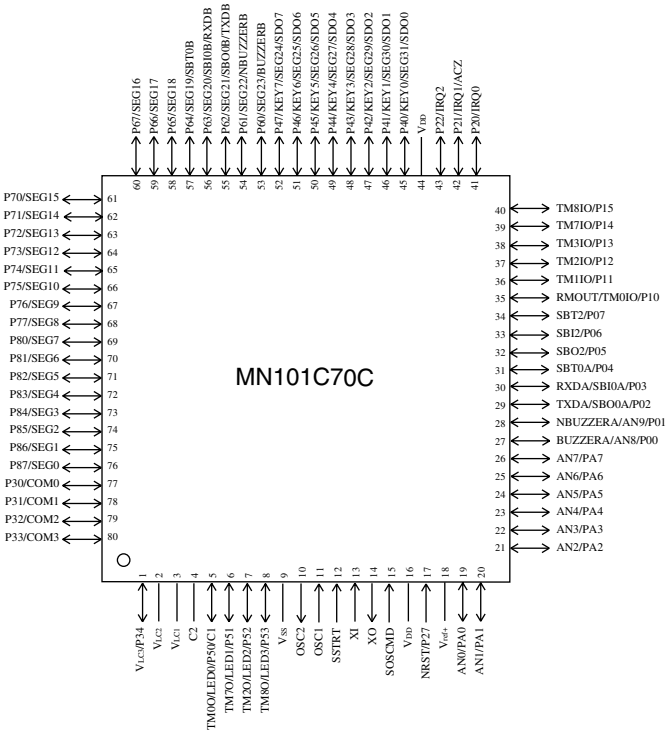

LQFP080-P-1414A *Lead-free

TQFP080-P-1212D *Lead-free

Support Tool

In-circuit Emulator

PX-ICE101C / D + PX-PRB101C70-LQFP080-P-1414A-M

PX-ICE101C / D + PX-PRB101C70-TQFP080-P-1212-M

Flash Memory Built-in Type

Type	MN101CF70D (under development)
ROM (× 8-bit)	64 K
RAM (× 8-bit)	4 K
Minimum instruction execution time	0.1 µs (at 3.0 V to 3.6 V, 10 MHz) 0.235 µs (at 2.2 V to 3.6 V, 4.25 MHz) 62.5 µs (at 2.2 V to 3.6 V, 32 kHz)
Package	LQFP080-P-1414A *Lead-free (under development) TQFP080-P-1212D *Lead-free (under planning)

www.DataSheet4U.com

www.DataSheet4U.com

www.DataSheet4U.com

www.DataSheet4U.com

❑ MN101C73A

Type	MN101C73A
ROM (×8-bit)	32 K
RAM (×8-bit)	1.5 K
Package	TQFP064-P-1010C *Lead-free, LQFP064-P-1414 *Lead-free (under planning)
Minimum Instruction Execution Time	0.1 µs (at 3.0 V to 3.6 V, 10 MHz) 0.235 µs (at 1.8 V to 3.6 V, 4.25 MHz) 62.5 µs (at 1.8 V to 3.6 V, 32 kHz) * The lower limit for operation guarantee for flash memory built-in type is 2.2 V.
Interrupts	• RESET • Watchdog • External 0 • External 1 • External 2 • External 3 • External 4 • External 5 • External 6 (key interrupt dedicated) • Timer 0 • Timer 1 • Timer 2 • Timer 3 • Timer 6 • Time base • Timer 7 (2 systems) • Timer 8 (2 systems) • Serial 0 (2 systems) • Serial 1 (2 systems) • Serial 3 • A/D conversion finish
Timer Counter	Timer counter 0 : 8-bit × 1 (square-wave/8-bit PWM output, event count, generation of remote control carrier, simple pulse width measurement, added pluse (2-bit) system PWM output) (square-wave/PWM output to large current terminal P50 possible) Clock source ····· 1/2, 1/4 of system clock frequency; 1/1, 1/4, 1/16, 1/32, 1/64 of OSC oscillation clock frequency; 1/1 of XI oscillation clock frequency; external clock input Interrupt source ····· coincidence with compare register 0 Timer counter 1 : 8-bit × 1 (square-wave output, event count, synchronous output event) Clock source ····· 1/2, 1/8 of system clock frequency; 1/1, 1/4, 1/16, 1/64, 1/128 of OSC oscillation clock frequency; 1/1 of XI oscillation clock frequency; external clock input; timer counter 8 output Interrupt source ····· coincidence with compare register 1 Timer counter 0, 1 can be cascade-connected. Timer counter 2 : 8-bit × 1 (square-wave output, added pluse (2-bit) system PWM output, PWM output, serial transfer clock output, event count, synchronous output event, simple pulse width measurement) (square-wave/PWM output to large current terminal P51 possible) Clock source ····· 1/2, 1/4 of system clock frequency; 1/1, 1/4, 1/16, 1/32, 1/64 of OSC oscillation clock frequency; 1/1 of XI oscillation clock frequency; external clock input Interrupt source ····· coincidence with compare register 2 Timer counter 3 : 8-bit × 1 (square-wave output, event count, serial transfer clock) Clock source ····· 1/2, 1/8 of system clock frequency; 1/1, 1/4, 1/16, 1/64, 1/128 of OSC oscillation clock frequency; 1/1 of XI oscillation clock frequency; external clock input Interrupt source ····· coincidence with compare register 3 Timer counter 2, 3 can be cascade-connected. Timer counter 6 : 8-bit freerun timer Clock source ····· 1/1 of system clock frequency; 1/1, 1/128, 1/8192 of OSC oscillation clock frequency; 1/1, 1/128, 1/8192 of XI oscillation clock frequency Interrupt source ····· coincidence with compare register 6

www.DataSheet4U.com

www.DataSheet4U.com

Timer Counter (Continue)			Timer counter 7 : 16-bit × 1 (square-wave output, 16-bit PWM output (cycle / duty continuous variable), event count, synchronous output event, pulse width measurement, input capture, real time output control, high performance IGBT output (Cycle/Duty can be changed constantly)) (square-wave/PWM output to large current terminal P52 possible) Clock source ····· 1/1, 1/2, 1/4, 1/16 of system clock frequency; 1/1, 1/2, 1/4, 1/16 of OSC oscillation clock frequency; 1/1, 1/2, 1/4, 1/16 of external clock input frequency Interrupt source ····· coincidence with compare register 7 (2 lines), input capture register Timer counter 8: 16 bit × 1 (square-wave/16-bit PWM output [duty continuous variable], event count, pulse width measurement, input capture) (square-wave/PWM output to large current terminal P53 possible) Clock source ····· 1/1, 1/2, 1/4, 1/16 of system clock frequency; 1/1, 1/2, 1/4, 1/16 of OSC oscillation clock frequency; 1/1, 1/2, 1/4, 1/16 of external clock input frequency Interrupt source ····· coincidence with compare register 8 (2 lines), input capture register Timer counters 7, 8 can be cascade-connected. (square-wave output, PWM is possible as a 32-bit timer.) Time base timer (one-minute count setting) Clock source ····· 1/1 of OSC oscillation clock frequency; 1/1 of XI oscillation clock frequency Interrupt source ····· 1/128, 1/256, 1/512, 1/1024, 1/4096, 1/8192, 1/16384, 1/32768, of clock source frequency Watchdog timer Interrupt source ····· 1/65536, 1/262144, 1/1048576 of system clock frequency
Serial Interface			Serial 0 : synchronous type/UART (full-duplex) × 1 Clock source ····· 1/2, 1/4 of system clock frequency; pulse output of timer counter 1 or 2; 1/2, 1/4, 1/16, 1/64 of OSC oscillation clock frequency, external clock Serial 1 : synchronous type/UART (full-duplex) × 1 Clock source ····· 1/2, 1/4 of system clock frequency; pulse output of timer counter 1 or 2; 1/2, 1/4, 1/16, 1/64 of OSC oscillation clock frequency, external clock Serial 3 : synchronous type/single-master I^2C × 1 Clock source ····· 1/2, 1/4 of system clock frequency; pulse output of timer counter 2 or 3; 1/2, 1/4, 1/16, 1/32 of OSC oscillation clock frequency, external clock
I/O Pins	**I/O**	55	• Common use • Specified pull-up resistor available • Input/output selectable (bit unit)
A/D Inputs			10-bit × 12-ch. (with S/H)
LCD			32 segments × 4 commons (static, 1/2, 1/3, or 1/4 duty) Usable if VLCD ≤ VDD LCD power shunt resistance contained
Special Ports			Buzzer output, remote control carrier signal output, high-current drive port
ROM Correction			Correcting address designation : up to 3 addresses possible

See the next page for pin assignment and support tool.

www.DataSheet4U.com

www.DataSheet4U.com

Electrical Characteristics

Supply current

Parameter	Symbol	Condition	Limit			Unit
			min	typ	max	
Operating supply current	IDD1	fosc = 4 MHz, VDD = 3 V		1	1.8	mA
	IDD2	fx = 32 kHz, VDD = 3 V		4	15	µA
Supply current at HALT	IDD3	fx = 32 kHz, VDD = 3 V, Ta = 25°C		2	5	µA
	IDD4	fx = 32 kHz, VDD = 3 V, Ta = −40°C to +85°C			10	µA
Supply current at STOP	IDD5	VDD = 3 V, Ta = 25°C			2	µA
	IDD6	VDD = 3 V, Ta = −40°C to +85°C			8	µA

Pin Assignment

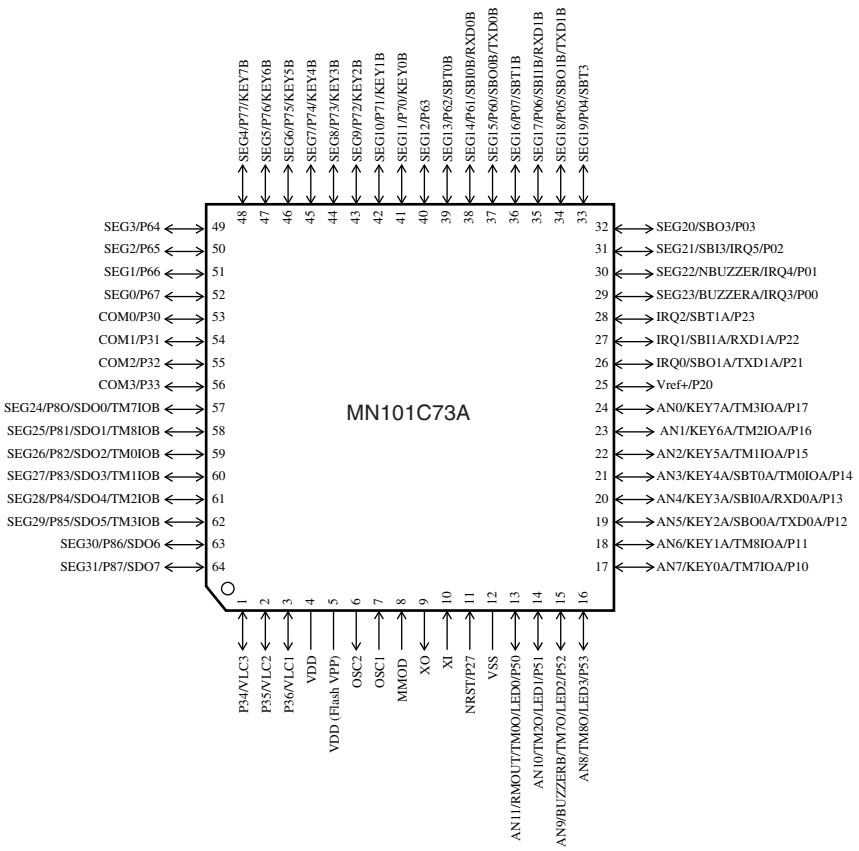

TQFP064-P-1010C *Lead-free

LQFP064-P-1414 *Lead-free

www.DataSheet4U.com

www.DataSheet4U.com

Support Tool

In-circuit Emulator

PX-ICE101C / D + PX-PRB101C73-TQFP064-P-1010C-M
PX-ICE101C / D + PX-PRB101C73-LQFP064-P-1414-M

Flash Memory Built-in Type

Type	MN101CF73A
ROM (× 8-bit)	32 K
RAM (× 8-bit)	2 K
Minimum instruction execution time	0.1 µs (at 3.0 V to 3.6 V, 10 MHz) 0.235 µs (at 2.2 V to 3.6 V, 4.25 MHz) 62.5 µs (at 2.2 V to 3.6 V, 32 kHz)
Package	TQFP064-P-1010C *Lead-free, LQFP064-P-1414 *Lead-free (under planning)

www.DataSheet4U.com

www.DataSheet4U.com

❑ MN101C74F, MN101C74G

Type	MN101C74F	MN101C74G
ROM (×8-bit)	96 K	128 K
RAM (×8-bit)	6 K	6 K

Package QFP100-P-1818B *Lead-free, LQFP100-P-1414 *Lead-free, MLGA100-L-1010 *Lead-free

Minimum Instruction Execution Time
0.1 µs (at 3.0 V to 3.6 V, 10 MHz)
0.235 µs (at 1.8 V to 3.6 V, 4.25 MHz)
62.5 µs (at 1.8 V to 3.6 V, 32 kHz)
* The lower limit for operation guarantee for flash memory built-in type is 2.2 V.

Interrupts
• RESET • Watchdog • External 0 • External 1 • External 2 • External 3 • External 4 • External 5
• External 6 (key interrupt dedicated) • Timer 0 • Timer 1 • Timer 2 • Timer 3 • Timer 6 • Time base
• Timer 7 (2 systems) • Timer 8 (2 systems) • Serial 0 (2 systems) • Serial 1 (2 systems) • Serial 3
• A/D conversion finish • Automatic transfer finish

Timer Counter

Timer counter 0 : 8-bit × 1
(square-wave/8-bit PWM output, event count, generation of remote control carrier, simple pulse width measurement, added pluse (2-bit) system PWM output) (square-wave/PWM output to large current terminal PC3 possible)
Clock source ····· 1/2, 1/4 of system clock frequency; 1/1, 1/4, 1/16, 1/32, 1/64 of OSC oscillation clock frequency; 1/1 of XI oscillation clock frequency; external clock input
Interrupt source ····· coincidence with compare register 0

Timer counter 1 : 8-bit × 1 (square-wave output, event count, synchronous output event)
Clock source ····· 1/2, 1/8 of system clock frequency; 1/1, 1/4, 1/16, 1/64, 1/128 of OSC oscillation clock frequency; 1/1 of XI oscillation clock frequency; external clock input; timer counter 8 output
Interrupt source ····· coincidence with compare register 1

Timer counter 0, 1 can be cascade-connected.

Timer counter 2 : 8-bit × 1
(square-wave output, added pluse (2-bit) system PWM output, PWM output, serial transfer clock output, event count, synchronous output event, simple pulse width measurement) (square-wave/PWM output to large current terminal PC5 possible)
Clock source ····· 1/2, 1/4 of system clock frequency; 1/1, 1/4, 1/16, 1/32, 1/64 of OSC oscillation clock frequency; 1/1 of XI oscillation clock frequency; external clock input
Interrupt source ····· coincidence with compare register 2

Timer counter 3 : 8-bit × 1
(square-wave output, event count, generation of remote control carrier, serial transfer clock)
Clock source ····· 1/2, 1/8 of system clock frequency; 1/1, 1/4, 1/16, 1/64, 1/128 of OSC oscillation clock frequency; 1/1 of XI oscillation clock frequency; external clock input
Interrupt source ····· coincidence with compare register 3

Timer counter 2, 3 can be cascade-connected.

Timer counter 6 : 8-bit freerun timer
Clock source ····· 1/1 of system clock frequency; 1/1, 1/128, 1/8192 of OSC oscillation clock frequency; 1/1, 1/128, 1/8192 of XI oscillation clock frequency
Interrupt source ····· coincidence with compare register 6

Timer counter 7 : 16-bit × 1
(square-wave output, 16-bit PWM output (cycle / duty continuous variable), event count, synchronous output event, pulse width measurement, input capture, real time output control, high performance IGBT output (Cycle/Duty can be changed constantly)) (square-wave/PWM output to large current terminal PC4 possible)
Clock source ····· 1/1, 1/2, 1/4, 1/16 of system clock frequency; 1/1, 1/2, 1/4, 1/16 of OSC oscillation clock frequency; 1/1, 1/2, 1/4, 1/16 of external clock input frequency
Interrupt source ····· coincidence with compare register 7 (2 lines), input capture register

www.DataSheet4U.com

www.DataSheet4U.com

Timer Counter (Continue)			Timer counter 8: 16 bit × 1 (square-wave/16-bit PWM output [duty continuous variable], event count, pulse width measurement, input capture) (square-wave/PWM output to large current terminal PC6 possible) Clock source ····· 1/1, 1/2, 1/4, 1/16 of system clock frequency; 1/1, 1/2, 1/4, 1/16 of OSC oscillation clock frequency; 1/1, 1/2, 1/4, 1/16 of external clock input frequency Interrupt source ····· coincidence with compare register 8 (2 lines), input capture register Timer counters 7, 8 can be cascade-connected. (square-wave output, PWM is possible as a 32-bit timer.) Time base timer (one-minute count setting) Clock source ····· 1/1 of OSC oscillation clock frequency; 1/1 of XI oscillation clock frequency Interrupt source ····· 1/128, 1/256, 1/512, 1/1024, 1/4096, 1/8192, 1/16384, 1/32768, of clock source frequency Watchdog timer Interrupt source ····· 1/65536, 1/262144, 1/1048576 of system clock frequency
DMA Controller (Automatic Data Transfer)			Max. Transfer cycles 255 Starting factor external request, various types of interrupt, software Transfer mode 1-byte transfer, word transfer, burst transfer
Serial Interface			Serial 0 : synchronous type/UART (full-duplex) × 1 Clock source ····· 1/2, 1/4 of system clock frequency; pulse output of timer counter 1 or 2; 1/2, 1/4, 1/16, 1/64 of OSC oscillation clock frequency, external clock Serial 1 : synchronous type/UART (full-duplex) × 1 Clock source ····· 1/2, 1/4 of system clock frequency; pulse output of timer counter 2 or 3; 1/2, 1/4, 1/16, 1/64 of OSC oscillation clock frequency, external clock Serial 3 : synchronous type/single-master I^2C × 1 Clock source ····· 1/2, 1/4 of system clock frequency; pulse output of timer counter 2 or 3; 1/2, 1/4, 1/16, 1/32 of OSC oscillation clock frequency, external clock Serial 4 : I^2C slave × 1 Applicable for I^2C high-speed transfer mode, 7-bit/10-bit address setting, general call
I/O Pins	**I/O**	87	• Common use • Specified pull-up resistor available • Input/output selectable (bit unit)
A/D Inputs			10-bit × 16-ch. (with S/H)
LCD			47 segments × 4 commons (static, 1/2, 1/3, or 1/4 duty) LCD power supply separated from VDD (usable if VDD ≤ VLCD ≤ 3.6 V) LCD power step-up circuit contained (3/2, 2 and 3 times) LCD power shunt resistance contained
Special Ports			Buzzer output, remote control carrier signal output, high-current drive port
ROM Correction			Correcting address designation: up to 7 addresses possible

See the next page for pin assignment and support tool.

www.DataSheet4U.com

www.DataSheet4U.com

Electrical Characteristics

Supply current

Parameter	Symbol	Condition	Limit			Unit
			min	typ	max	
Operating supply current	IDD1	fosc = 4 MHz, VDD = 3 V		1	1.8	mA
	IDD2	fx = 32 kHz, VDD = 3 V		4	15	µA
Supply current at HALT	IDD3	fx = 32 kHz, VDD = 3 V, Ta = 25°C		2	5	µA
	IDD4	fx = 32 kHz, VDD = 3 V, Ta = −40°C to +85°C			10	µA
Supply current at STOP	IDD5	VDD = 3 V, Ta = 25°C			2	µA
	IDD6	VDD = 3 V, Ta = −40°C to +85°C			8	µA

Pin Assignment

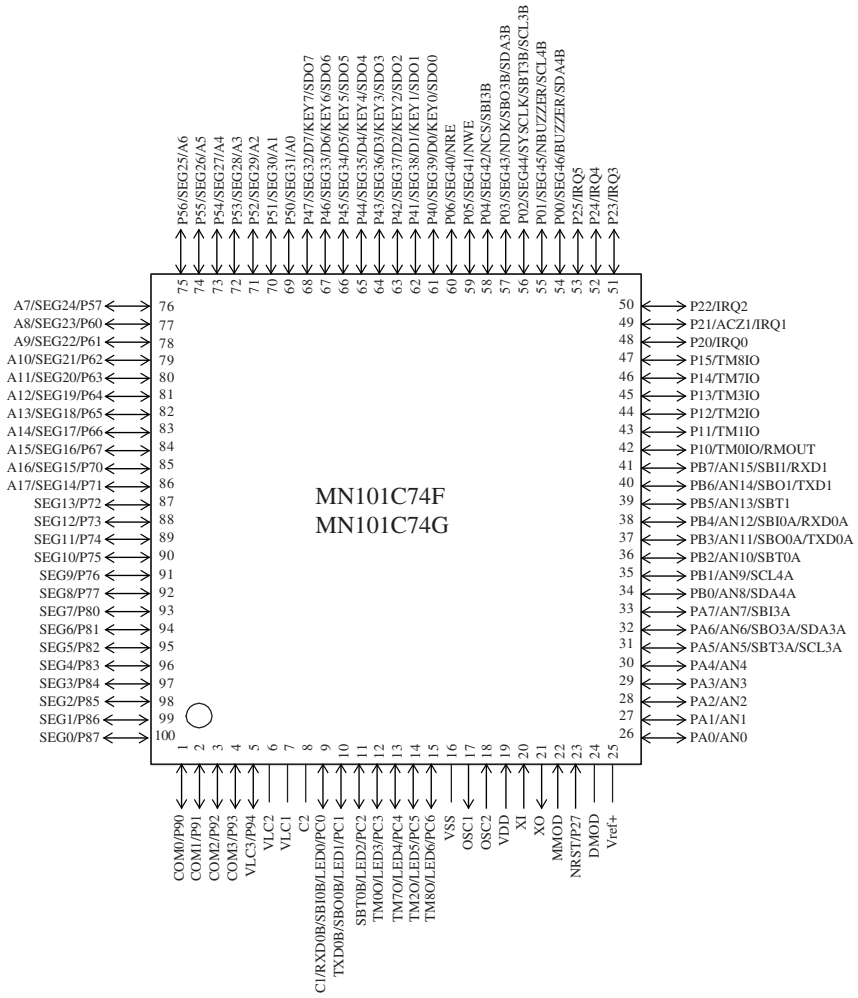

QFP100-P-1818B *Lead-free

LQFP100-P-1414 *Lead-free

MLGA100-L-1010 *Lead-free

www.DataSheet4U.com

www.DataSheet4U.com

Support Tool

In-circuit Emulator

PX-ICE101C / D + PX-PRB101C74-QFP100-P-1818B-M
PX-ICE101C / D + PX-PRB101C74-LQFP100-P-1414-M

Flash Memory Built-in Type

Type	MN101CF74G
ROM (× 8-bit)	128 K
RAM (× 8-bit)	6 K
Minimum instruction execution time	0.1 µs (at 3.0 V to 3.6 V, 10 MHz) 0.235 µs (at 2.2 V to 3.6 V, 4.25 MHz) 62.5 µs (at 2.2 V to 3.6 V, 32 kHz)
Package	QFP100-P-1818B *Lead-free, LQFP100-P-1414 *Lead-free MLGA100-L-1010 *Lead-free

www.DataSheet4U.com

www.DataSheet4U.com

❑ MN101C78A

Type	MN101C78A
ROM (×8-bit)	32 K
RAM (×8-bit)	1.5 K
Package	TQFP048-P-0707B *Lead-free
Minimum Instruction Execution Time	0.100 µs (at 3.0 V to 3.6 V, 10 MHz) 0.118 µs (at 2.7 V to 3.6 V, 8.5 MHz) 0.235 µs (at 1.8 V to 3.6 V, 4.25 MHz) 62.5 µs (at 1.8 V to 3.6 V, 32 kHz) * The lower limit for operation guarantee for flash memory built-in type is 2.2 V.
Interrupts	• RESET • Watchdog • External 0 • External 1 • External 2 • External 4 (key interrupt dedicated) • Timer 0 • Timer 1 • Timer 2 • Timer 3 • Timer 6 • Time base • Timer 7 (2 systems) • Timer 8 (2 systems) • Serial 0 (2 systems) • Serial 1 (2 systems) • Serial 3, Serial 4 • A/D conversion finish
Timer Counter	Timer counter 0 : 8-bit × 1 (square-wave/8-bit PWM output, event count, generation of remote control carrier, simple pulse width measurement, added pluse (2-bit) system PWM output, real time output control) (square-wave/PWM output to large current terminal P50 possible) Clock source ····· 1/2, 1/4 of system clock frequency; 1/1, 1/4, 1/16, 1/32, 1/64 of OSC oscillation clock frequency; 1/1 of XI oscillation clock frequency; external clock input Interrupt source ····· coincidence with compare register 0 Timer counter 1 : 8-bit × 1 (square-wave output, event count, synchronous output event) Clock source ····· 1/2, 1/8 of system clock frequency; 1/1, 1/4, 1/16, 1/64, 1/128 of OSC oscillation clock frequency; 1/1 of XI oscillation clock frequency; external clock input Interrupt source ····· coincidence with compare register 1 Timer counter 0, 1 can be cascade-connected. Timer counter 2 : 8-bit × 1 (square-wave output, added pluse (2-bit) system PWM output, PWM output, serial transfer clock output, real time output control, event count, synchronous output event, simple pulse width measurement) (square-wave/PWM output to large current terminal P52 possible) Clock source ····· 1/2, 1/4 of system clock frequency; 1/1, 1/4, 1/16, 1/32, 1/64 of OSC oscillation clock frequency; 1/1 of XI oscillation clock frequency; external clock input Interrupt source ····· coincidence with compare register 2 Timer counter 3 : 8-bit × 1 (square-wave output, event count, generation of remote control carrier, serial transfer clock) Clock source ····· 1/2, 1/8 of system clock frequency; 1/1, 1/4, 1/16, 1/64, 1/128 of OSC oscillation clock frequency; 1/1 of XI oscillation clock frequency; external clock input Interrupt source ····· coincidence with compare register 3 Timer counter 2, 3 can be cascade-connected. Timer counter 6 : 8-bit freerun timer Clock source ····· 1/1 of system clock frequency; 1/1, 1/128, 1/8192 of OSC oscillation clock frequency; 1/1, 1/128, 1/8192 of XI oscillation clock frequency Interrupt source ····· coincidence with compare register 6 Timer counter 7 : 16-bit × 1 (square-wave output, 16-bit PWM output (cycle / duty continuous variable), event count, synchronous output event, pulse width measurement, input capture, real time output control, high performance IGBT output) (square-wave/PWM output to large current terminal P51 possible) Clock source ····· 1/1, 1/2, 1/4, 1/16 of system clock frequency; 1/1, 1/2, 1/4, 1/16 of OSC oscillation clock frequency; 1/1, 1/2, 1/4, 1/16 of external clock input frequency Interrupt source ····· coincidence with compare register 7 (2 lines), input capture register

www.DataSheet4U.com

www.DataSheet4U.com

Timer Counter (Continue)

Timer counter 8: 16 bit × 1
(square-wave/16-bit PWM output [duty continuous variable], event count, pulse width measurement, input capture)
(square-wave/PWM output to large current terminal P53 possible)
Clock source ····· 1/1, 1/2, 1/4, 1/16 of system clock frequency;
1/1, 1/2, 1/4, 1/16 of OSC oscillation clock frequency;
1/1, 1/2, 1/4, 1/16 of external clock input frequency
Interrupt source ····· coincidence with compare register 8 (2 lines), input capture register

Timer counters 7, 8 can be cascade-connected.
(square-wave output, PWM input capture, pluse width measurement is possible as a 32-bit timer.)

Time base timer (one-minute count setting)
Clock source ····· 1/1 of OSC oscillation clock frequency; 1/1 of XI oscillation clock frequency
Interrupt source ····· 1/128, 1/256, 1/512, 1/1024, 1/8192, 1/32768, of clock source frequency

Watchdog timer
Interrupt source ····· 1/65536, 1/262144, 1/1048576 of system clock frequency

Serial Interface

Serial 0 : synchronous type/UART (full-duplex) × 1
Clock source ····· 1/2, 1/4 of system clock frequency; pulse output of timer counter 1 or 2;
1/2, 1/4, 1/16, 1/64 of OSC oscillation clock frequency, external clock
Serial 1 : synchronous type/UART (full-duplex) × 1
Clock source ····· 1/2, 1/4 of system clock frequency; pulse output of timer counter 1 or 2;
1/2, 1/4, 1/16, 1/64 of OSC oscillation clock frequency, external clock

Serial 3 : synchronous type/single-master I^2C × 1
Clock source ····· 1/2, 1/4 of system clock frequency; pulse output of timer counter 2 or 3;
1/2, 1/4, 1/16, 1/32 of OSC oscillation clock frequency, external clock

Serial 4 : I^2C slave × 1
Applicable for I^2C high-speed transfer mode, 7bit/10bit address setting, general call

I/O Pins	I/O	39	• Common use • Specified pull-up resistor available • Input/output selectable (bit unit)

A/D Inputs

10-bit × 7-ch. (with S/H)

LCD

12 segments × 4 commons (static, 1/2, 1/3, or 1/4 duty)
(usable if VLCD ≤ VDD)

Special Ports

Buzzer output, remote control carrier signal output, high-current drive port

Electrical Characteristics

Supply current

Parameter	Symbol	Condition	Limit			Unit
			min	typ	max	
Operating supply current	IDD1	fosc = 4.25 MHz (fs = fosc / 2), VDD = 3 V		0.6(1.3)	1.1(2.2)	mA
	IDD2	fx = 32 kHz (fs = fx / 2), VDD = 3 V		4(46)	15(90)	µA
Supply current at HALT	IDD3	fx = 32 kHz, VDD = 3 V, Ta = 25°C		2(3)	5(13)	µA
	IDD4	fx = 32 kHz, VDD = 3 V, Ta = −40°C to +85°C			10(40)	µA
Supply current at STOP	IDD5	VDD = 3 V, Ta = 25°C			2(3)	µA
	IDD6	VDD = 3 V, Ta = −40°C to +85°C			8(30)	µA

( ) : Flash memory built-in type

See the next page for pin assignment and support tool.

www.DataSheet4U.com

www.DataSheet4U.com

Pin Assignment

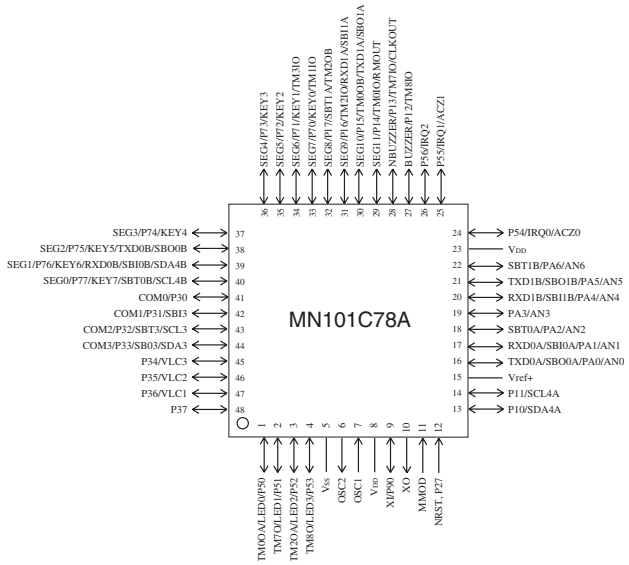

TQFP048-P-0707B *Lead-free

Support Tool

In-circuit Emulator	PX-ICE101C / D + PX-PRB101C78-TQFP048-P-0707B-M	
Flash Memory Built-in Type	Type	MN101CF78A
	ROM (× 8-bit)	32 K
	RAM (× 8-bit)	1.5 K
	Minimum instruction execution time	0.118 µs (at 3.0 V to 3.6 V, 8.5 MHz) 0.125 µs (at 2.7 V to 3.6 V, 8.0 MHz) 0.500 µs (at 2.2 V to 3.6 V, 2.0 MHz) 62.5 µs (at 2.2 V to 3.6 V, 32 kHz)
	Package	TQFP048-P-0707B *Lead-free

www.DataSheet4U.com

www.DataSheet4U.com

www.DataSheet4U.com

www.DataSheet4U.com

❑ MN101C79A

Type	MN101C79A
ROM (×8-bit)	32 K
RAM (×8-bit)	1.5 K
Package	QFN044-P-0606A *Lead-free
Minimum Instruction Execution Time	0.100 µs (at 3.0 V to 3.6 V, 10 MHz) 0.118 µs (at 2.7 V to 3.6 V, 8.5 MHz) 0.235 µs (at 1.8 V to 3.6 V, 4.25 MHz) 62.5 µs (at 1.8 V to 3.6 V, 32 kHz) * The lower limit for operation guarantee for flash memory built-in type is 2.2 V.
Interrupts	• RESET • Watchdog • External 0 • External 1 • External 2 • External 4 (key interrupt dedicated) • Timer 0 • Timer 1 • Timer 2 • Timer 3 • Timer 6 • Time base • Timer 7 (2 systems) • Timer 8 (2 systems) • Serial 0 (2 systems) • Serial 1 (2 systems) • Serial 3, Serial 4 • A/D conversion finish
Timer Counter	Timer counter 0 : 8-bit × 1 (square-wave/8-bit PWM output, event count, generation of remote control carrier, simple pulse width measurement, added pluse (2-bit) system PWM output, real time output control) (square-wave/PWM output to large current terminal P50 possible) Clock source ····· 1/2, 1/4 of system clock frequency; 1/1, 1/4, 1/16, 1/32, 1/64 of OSC oscillation clock frequency; 1/1 of XI oscillation clock frequency; external clock input Interrupt source ····· coincidence with compare register 0 Timer counter 1 : 8-bit × 1 (square-wave output, event count, synchronous output event) Clock source ····· 1/2, 1/8 of system clock frequency; 1/1, 1/4, 1/16, 1/64, 1/128 of OSC oscillation clock frequency; 1/1 of XI oscillation clock frequency; external clock input Interrupt source ····· coincidence with compare register 1 Timer counter 0, 1 can be cascade-connected. Timer counter 2 : 8-bit × 1 (square-wave output, added pluse (2-bit) system PWM output, PWM output, serial transfer clock output, real time output control, event count, synchronous output event, simple pulse width measurement) (square-wave/PWM output to large current terminal P52 possible) Clock source ····· 1/2, 1/4 of system clock frequency; 1/1, 1/4, 1/16, 1/32, 1/64 of OSC oscillation clock frequency; 1/1 of XI oscillation clock frequency; external clock input Interrupt source ····· coincidence with compare register 2 Timer counter 3 : 8-bit × 1 (square-wave output, event count, generation of remote control carrier, serial transfer clock) Clock source ····· 1/2, 1/8 of system clock frequency; 1/1, 1/4, 1/16, 1/64, 1/128 of OSC oscillation clock frequency; 1/1 of XI oscillation clock frequency; external clock input Interrupt source ····· coincidence with compare register 3 Timer counter 2, 3 can be cascade-connected. Timer counter 6 : 8-bit freerun timer Clock source ····· 1/1 of system clock frequency; 1/1, 1/128, 1/8192 of OSC oscillation clock frequency; 1/1, 1/128, 1/8192 of XI oscillation clock frequency Interrupt source ····· coincidence with compare register 6 Timer counter 7 : 16-bit × 1 (square-wave output, 16-bit PWM output (cycle / duty continuous variable), event count, synchronous output event, pulse width measurement, input capture, real time output control, high performance IGBT output) (square-wave/PWM output to large current terminal P51 possible) Clock source ····· 1/1, 1/2, 1/4, 1/16 of system clock frequency; 1/1, 1/2, 1/4, 1/16 of OSC oscillation clock frequency; 1/1, 1/2, 1/4, 1/16 of external clock input frequency Interrupt source ····· coincidence with compare register 7 (2 lines), input capture register

www.DataSheet4U.com

www.DataSheet4U.com

Timer Counter (Continue)

Timer counter 8: 16 bit × 1
(square-wave/16-bit PWM output [duty continuous variable], event count, pulse width measurement, input capture)
(square-wave/PWM output to large current terminal P53 possible)
Clock source ····· 1/1, 1/2, 1/4, 1/16 of system clock frequency;
1/1, 1/2, 1/4, 1/16 of OSC oscillation clock frequency;
1/1, 1/2, 1/4, 1/16 of external clock input frequency
Interrupt source ····· coincidence with compare register 8 (2 lines), input capture register

Timer counters 7, 8 can be cascade-connected.
(square-wave output, PWM input capture, pluse width measurement is possible as a 32-bit timer.)

Time base timer (one-minute count setting)
Clock source ····· 1/1 of OSC oscillation clock frequency; 1/1 of XI oscillation clock frequency
Interrupt source ····· 1/128, 1/256, 1/512, 1/1024, 1/8192, 1/32768, of clock source frequency

Watchdog timer
Interrupt source ····· 1/65536, 1/262144, 1/1048576 of system clock frequency

Serial Interface

Serial 0 : synchronous type/UART (full-duplex) × 1
Clock source ····· 1/2, 1/4 of system clock frequency; pulse output of timer counter 1 or 2;
1/2, 1/4, 1/16, 1/64 of OSC oscillation clock frequency, external clock
Serial 1 : synchronous type/UART (full-duplex) × 1
Clock source ····· 1/2, 1/4 of system clock frequency; pulse output of timer counter 1 or 2;
1/2, 1/4, 1/16, 1/64 of OSC oscillation clock frequency, external clock

Serial 3 : synchronous type/single-master I^2C × 1
Clock source ····· 1/2, 1/4 of system clock frequency; pulse output of timer counter 2 or 3;
1/2, 1/4, 1/16, 1/32 of OSC oscillation clock frequency, external clock

Serial 4 : I^2C slave × 1
Applicable for I^2C high-speed transfer mode, 7bit/10bit address setting, general call

I/O Pins	I/O	35	• Common use • Specified pull-up resistor available • Input/output selectable (bit unit)

A/D Inputs

10-bit × 4-ch. (with S/H)

LCD

12 segments × 4 commons (static, 1/2, 1/3, or 1/4 duty)
(usable if VLCD ≤ VDD)

Special Ports

Buzzer output, remote control carrier signal output, high-current drive port

Electrical Characteristics

Supply current

Parameter	Symbol	Condition	Limit			Unit
			min	typ	max	
Operating supply current	IDD1	fosc = 4.25 MHz (fs = fosc / 2), VDD = 3 V		0.6(1.3)	1.1(2.2)	mA
	IDD2	fx = 32 kHz (fs = fx / 2), VDD = 3 V		4(46)	15(90)	µA
Supply current at HALT	IDD3	fx = 32 kHz, VDD = 3 V, Ta = 25°C		2(3)	5(13)	µA
	IDD4	fx = 32 kHz, VDD = 3 V, Ta = −40°C to +85°C			10(40)	µA
Supply current at STOP	IDD5	VDD = 3 V, Ta = 25°C			2(3)	µA
	IDD6	VDD = 3 V, Ta = −40°C to +85°C			8(30)	µA

( ) : Flash memory built-in type

See the next page for pin assignment and support tool.

www.DataSheet4U.com

www.DataSheet4U.com

Pin Assignment

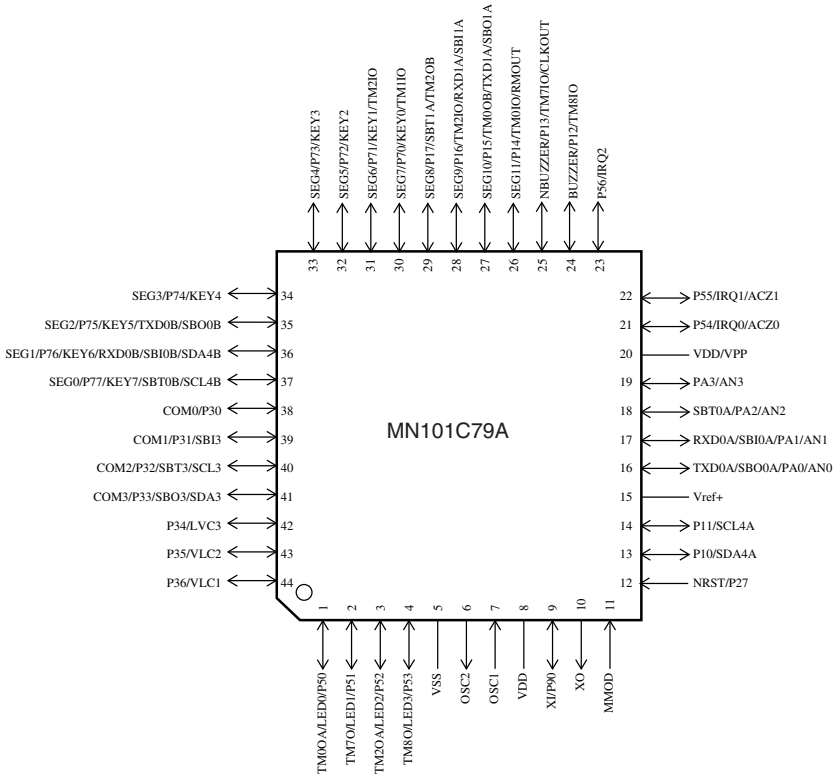

QFN044-P-0606A *Lead-free

Support Tool

In-circuit Emulator	PX-ICE101C / D + PX-PRB101C78-TQFP048-P-0707B-M	
Flash Memory Built-in Type	Type	MN101CF79A
	ROM (× 8-bit)	32 K
	RAM (× 8-bit)	1.5 K
	Minimum instruction execution time	0.118 µs (at 3.0 V to 3.6 V, 8.5 MHz) 0.125 µs (at 2.7 V to 3.6 V, 8.0 MHz) 0.500 µs (at 2.2 V to 3.6 V, 2.0 MHz) 62.5 µs (at 2.2 V to 3.6 V, 32 kHz)
	Package	QFN044-P-0606A *Lead-free

www.DataSheet4U.com

www.DataSheet4U.com

www.DataSheet4U.com

www.DataSheet4U.com

❑ MN101C84A

Type	MN101C84A
ROM (×8-bit)	32K
RAM (×8-bit)	1K
Package	LQFP064-P-1414 *Lead-free
Minimum Instruction Execution Time	0.1 µs (at 4.5 V to 5.5 V, 20 MHz) 0.25 µs (at 2.7 V to 5.5 V, 8 MHz) 62.5 µs (at 2.0 V to 5.5 V, 32 kHz) * * The lower limit for operation guarantee for flash memory built-in type is 2.5 V.
Interrupts	• RESET • Watchdog • External 0 • External 1 • External 2 • External 4 (key interrupt dedicated) • Timer 0 • Timer 1 • Timer 2 • Timer 3 • Timer 6 • Time base • Timer 7 (2 systems) • Timer 8 (2 systems) • Serial 0 (2 systems) • A/D conversion finish
Timer Counter	Timer counter 0: 8-bit × 1 (square-wave/8-bit PWM output, event count, generation of remote control carrier, simple pulse width measurement) (square-wave/PWM output to large current terminal P50 possible) Clock source ····· 1/2, 1/4 of system clock frequency; 1/1, 1/4, 1/16, 1/32, 1/64, 1/128, 1/256, 1/512 of OSC oscillation clock frequency; 1/1 of XI oscillation clock frequency; external clock input Interrupt source ····· coincidence with compare register 0 Timer counter 1: 8-bit × 1 (square-wave output, event count, synchronous output event) Clock source ····· 1/2, 1/8 of system clock frequency; 1/1, 1/4, 1/16, $1/2^{13}$, $1/2^{15}$, 1/32, 1/64, 1/128, 1/256 of OSC oscillation clock frequency; 1/1 of XI oscillation clock frequency; external clock input Interrupt source ····· coincidence with compare register 1 Timer counter 0, 1 can be cascade-connected. Timer counter 2: 8-bit × 1 (square-wave output, additional pulse type 10-bit PWM output, event count, synchronous output event, simple pulse width measurement) (square-wave/PWM output to large current terminal P52 possible) Clock source ····· 1/2, 1/4 of system clock frequency; 1/1, 1/4, 1/16, 1/32, 1/64, 1/128, 1/256, 1/512 of OSC oscillation clock frequency; 1/1 of XI oscillation clock frequency; external clock input Interrupt source ····· coincidence with compare register 2 Timer counter 3: 8-bit × 1 (square-wave output, event count, generation of remote control carrier, serial 0 baud rate timer) Clock source ····· 1/2, 1/8 of system clock frequency; 1/1, 1/4, 1/16, 1/64, 1/128, 1/256, 1/512 of OSC oscillation clock frequency; 1/1 of XI oscillation clock frequency; external clock input Interrupt source ····· coincidence with compare register 3 Timer counter 2, 3 can be cascade-connected. Timer counter 6: 8-bit freerun timer Clock source ····· 1/1 of system clock frequency; 1/1, $1/2^{12}$, $1/2^{13}$ of OSC oscillation clock frequency; 1/1, $1/2^{12}$, $1/2^{13}$ of XI oscillation clock frequency Interrupt source ····· coincidence with compare register 6 Timer counter 7: 16-bit × 1 (square-wave output, IGBT/16-bit PWM output (cycle / duty continuous variable), event count, synchronous output evevt, pulse width measurement, input capture) (square-wave/PWM output to large current terminal P51 possible) Clock source ····· 1/1, 1/2, 1/4, 1/16 of system clock frequency; 1/1, 1/2, 1/4, 1/16 of OSC oscillation clock frequency; 1/1, 1/2, 1/4, 1/16 of external clock input frequency Interrupt source ····· coincidence with compare register 7 (2 lines) Timer counter 8: 16 bit × 1 (square-wave/16-bit PWM output [duty continuous variable], event count, pulse width measurement, input capture) (square-wave/PWM output to large current terminal P53 possible)

www.DataSheet4U.com

www.DataSheet4U.com

Timer Counter (Continue)

Clock source ····· 1/1, 1/2, 1/4, 1/16 of system clock frequency;
1/1, 1/2, 1/4, 1/16 of OSC oscillation clock frequency;
1/1, 1/2, 1/4, 1/16 of external clock input frequency
Interrupt source ····· coincidence with compare register 8 (2 lines)

Timer counters 7, 8 can be cascade-connected.
(square-wave output, PWM, input capture, pulse width measurement is possible as a 32-bit timer.)

Time base timer (one-minute count setting)
Clock source ····· 1/1 of OSC oscillation clock frequency; 1/1 of XI oscillation clock frequency
Interrupt source ····· 1/128, 1/256, 1/512, $1/2^{10}$, $1/2^{13}$, $1/2^{15}$ of clock source frequency

Watchdog timer
Interrupt source ····· 1/65536, 1/262144, 1/1048576 of system clock frequency

Serial Interface

Serial 0: synchronous type/UART (full-duplex) × 1
Clock source ····· 1/2, 1/4 of system clock frequency; pulse output of timer counter 3;
1/2, 1/4, 1/16, 1/64 of OSC oscillation clock frequency

I/O Pins	**I/O**	53	• Common use • Specified pull-up resistor available • Input/output selectable (bit unit)
	Input	3	• Common use • Specified pull-up resistor available

A/D Inputs

10-bit × 8-ch. (with S/H)

LCD

32 segments × 4 commons (static, 1/2, 1/3, or 1/4 duty)
LCD power supply separated from VDD (usable if VLCD ≤ VDD ≤ 5.5 V)
LCD power shunt resistance contained

Special Ports

Buzzer output, remote control carrier signal output, high-current drive port

Electrical Characteristics

Supply current

Parameter	Symbol	Condition	Limit			Unit
			min	typ	max	
Operating supply current	IDD1	fosc = 20 MHz, VDD = 5 V		15	30	mA
	IDD2	fosc = 8 MHz, VDD = 5 V		8	16	mA
	IDD3	fx = 32 kHz, VDD = 3 V		30	60	µA
Supply current at HALT	IDD4	fx = 32 kHz, VDD = 3 V, Ta = 25°C		4	8	µA
	IDD5	fx = 32 kHz, VDD = 3 V, Ta = −40°C to +85°C			30	µA
Supply current at STOP	IDD6	VDD = 5 V, Ta = 25°C			2	µA
	IDD7	VDD = 5 V, Ta = −40°C to +85°C			50	µA

www.DataSheet4U.com

www.DataSheet4U.com

Pin Assignment

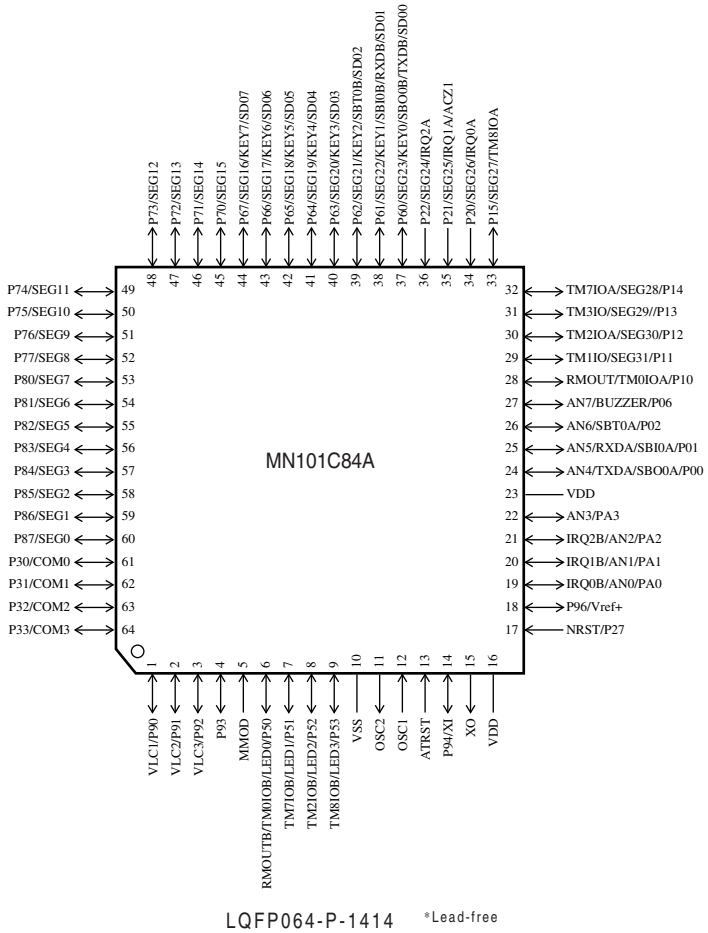

LQFP064-P-1414 *Lead-free

Support Tool

In-circuit Emulator	PX-ICE101C / D + PX-PRB101C84-LQFP064-P-1414-M	
Flash Memory Built-in Type	Type	MN101CF84D
	ROM (× 8-bit)	64 K
	RAM (× 8-bit)	2 K
	Minimum instruction execution time	0.1 µs (at 4.5 V to 5.5 V, 20 MHz)
		0.25 µs (at 2.7 V to 5.5 V, 8 MHz)
		62.5 µs (at 2.5 V to 5.5 V, 32 kHz)
	Package	LQFP064-P-1414 *Lead-free

www.DataSheet4U.com