Technical Specification
for
Optical Transceiver Module

SCM6212-GL

☐ 155.52Mb/s	☑ 622.08Mb/s	☐ other _____
☐ Short Haul Intermediate Reach	☑ Long Haul Long Reach	☐ other _____
☐ Single 5.0 V	☑ Single 3.3 V	☐ other _____
☑ 1.3 μm	☐ 1.55 μm	☐ other _____
☐ Transmitter	☐ Receiver	☑ Transceiver
	(☐ 2R / ☐ 3R)	(☑ 2R / ☐ 3R)

Applicable Part Numbers : SCM6212-GL-ZN, SCM6212-GL-CN

SUMITOMO ELECTRIC

Sumitomo Electric reserves the right to make changes in this specification without prior notice.

#Safety Precaution Symbols This specification uses various picture symbols to prevent possible injury to operator or other persons or damage to properties for appropriate use of the product. The symbols and definitions are as shown below. Be sure to be familiar with these symbols before reading this specification.

⚠ Warning	Wrong operation without following this instruction may lead to human death or serious injury.
⚠ Caution	Wrong operation without following this instruction may lead to human injury or property damage.

Example of picture symbols
❗ indicates prohibition of actions. Action details are explained thereafter.
⃠ indicates compulsory actions or instructions. Action details are explained thereafter.

1. General

Features of SCM6212-GL are listed below.

* SDH STM-4 L-4.1 / SONET OC-12 LR-1 Compliant
* Power Supply Voltage Single +3.3V
* Compact Package Size 49.0 X 13.59 X 9.4 mm (max.)
* Electrical Interface LVPECL for DATA and Signal Detect, LVTTL for Laser Disable
* Fiber Coupled Power -3 ~ +2dBm (Typ. -0.5dBm) into SMF
* Input Power Range -8 ~ -28dBm (Typ. -32dBm)
* Laser Disable Function
* Signal Detect (SD) Function
* Connector Interface LC Duplex Receptacle

2. Block Diagram

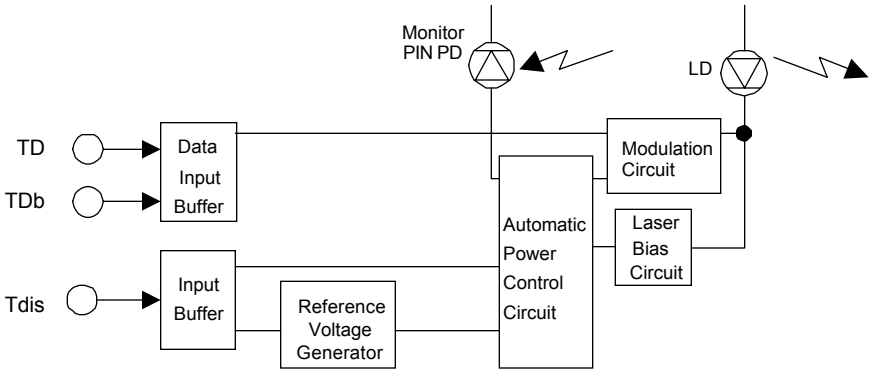

Figure 1-1. Block Diagram (Transmitter)

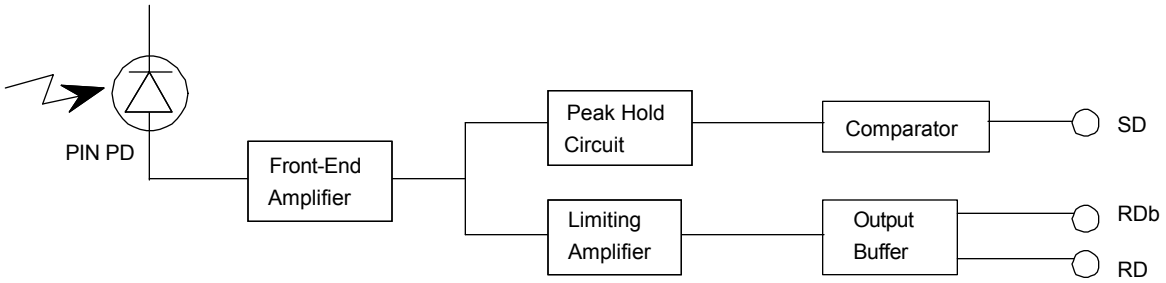

Figure 1-2. Block Diagram (Receiver)

⚠Caution

Do not disassemble this product. Otherwise, failure, electrical shock, overheating or fire may occur.
Handle the lead pins carefully. Use assisting tools or prospective aids as required. A lead pin may injure skin or human body

3. Package Dimension

All dimensions are in mm.

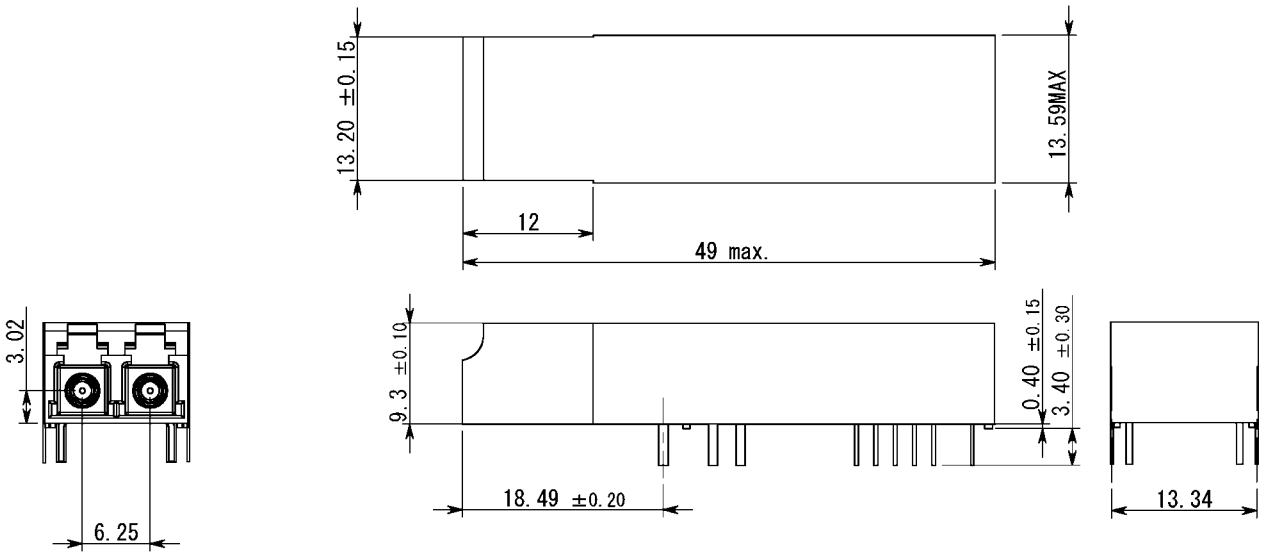

Figure 2-1. Outline Dimensions (SCM6212-GL-Z#)

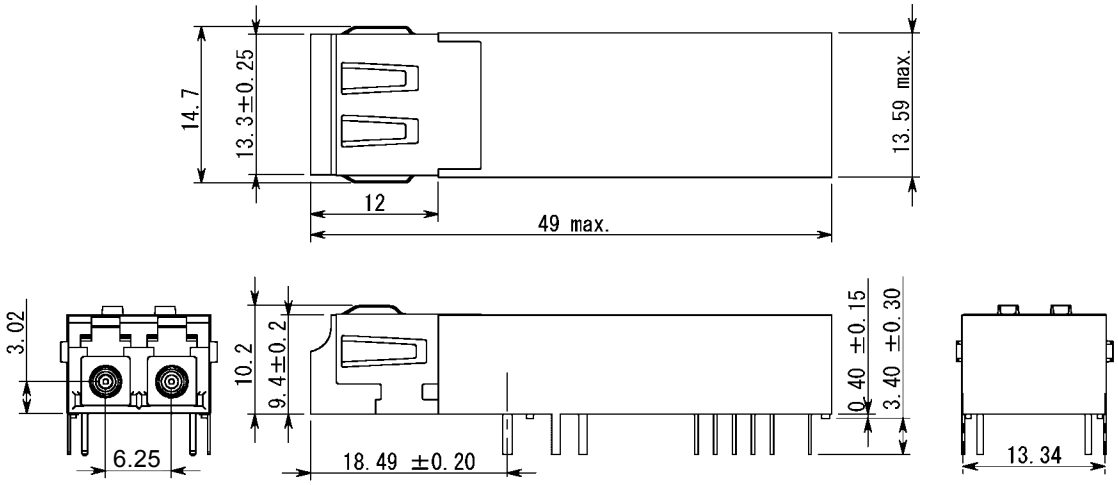

Figure 2-2. Outline Dimensions (SCM6212-GL-C#)

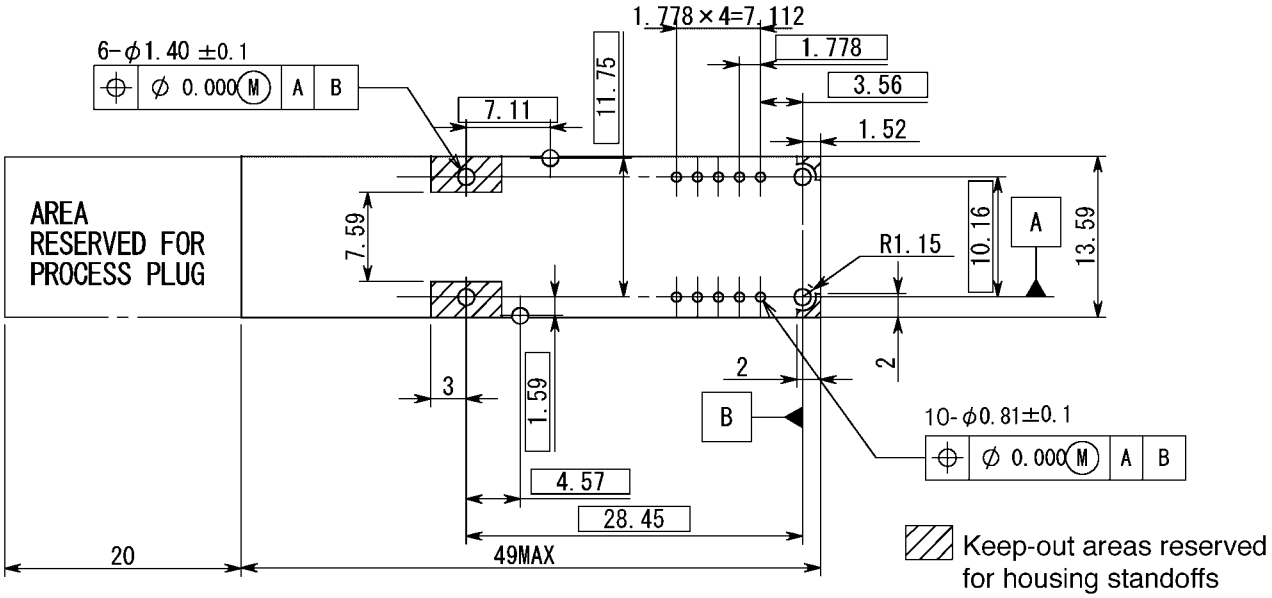

Figure 2-3. Recommended Footprint

4. Pin Assignment

No.	Symbol	I/O/P	Level	Description
1	VeeR	P	GND	**Power Supply (-) for Receiver.**
2	VccR	P	+3.3V DC	**Power Supply (+) for Receiver.**
3	SD	O	LVPECL	**Signal Detect.** High level indicates presence of optical input signal (Active High).
4	RDb	O	LVPECL	**Inverted Receiver Output Data.** No internal terminations are provided.
5	RD	O	LVPECL	**Non-Inverted Receiver Output Data.** No internal terminations are provided.
6	VccT	P	+3.3V DC	**Power Supply (+) for Transmitter.**
7	VeeT	P	GND	**Power Supply (-) for Transmitter.**
8	Tdis	I	LVTTL/LVCMOS	**Transmitter Disable (Active High).** Defaults to logic 0 (enable TX) when left open.
9	TD	I	LVPECL	**Non-Inverted Transmitter Input Data.** Self biased. Not internally terminated.
10	TDb	I	LVPECL	**Inverted Transmitter Input Data.** Self biased. Not internally terminated.

Notes:
1. I/O/P stands for signal input, signal output, and DC power/bias supply, respectively.

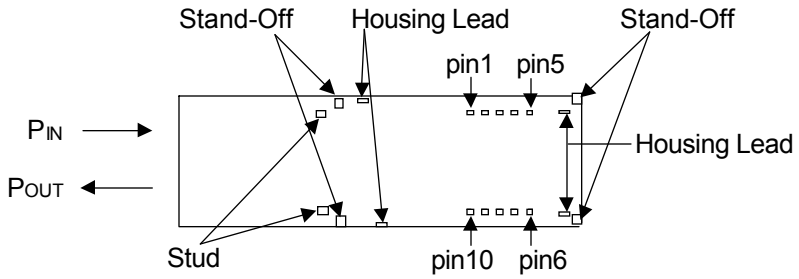

Figure 3. Bottom View

5. Absolute Maximum Ratings

Parameter	Symbol	min.	Max	Unit	Note
Storage Case Temperature	Ts	-40	85	°C	1
Operating Case Teperature	Tc	-5	70	°C	2
		-40	85		3
Supply Voltage	Vcc	0.0	4.0	V	
Input Voltage	Vi	0	Vcc+0.5	V	4
Lead Soldering Conditions	Temperature		260	°C	5
	Time		10	sec.	

Notes:
1. No condensation allowed.
2. SCM6212-GL-#N
3. SCM6212-GL-#W
4. TD, TDb, Tdis
5. Measured on lead pin at 2mm (0.079in.) off the package bottom

⚠ Warning

Use the product with the rated voltage described in the specification. If the voltage exceeds the maximum rating, overheating or fire may occur.

⚠ Caution

Do not store the product in the area where temperature exceeds the maximum rating, where there is too much moisture or dampness, where there is acid gas or corrosive gas, or other extreme conditions. Otherwise, failure, overheating or fire may occur.

6. Electrical Interface

(Unless otherwise specified, Vcc = 3.14 to 3.47 V and all operating temperature shall apply.)

6-1. Transmitter side

Parameter		Symbol	min.	Typ.	Max.	Unit	Note
Supply Voltage		Vcc	3.14	3.30	3.47	V	
Supply Current		Idtx		70	150	mA	1, 2, 3
TD, TDb Input Voltage	High	Vih	Vcc-1.17		Vcc-0.73	V	4, 5, 6
	Low	Vil	Vcc-1.95		Vcc-1.45		
Signal Input Rise / Fall Time					0.5	nsec.	7
Tdis Input Voltage	High	Vdi	2.0		Vcc	V	8
	Low	Vei	0.0		0.8	V	
Tdis Input Current	High	Idi	-10	140	200	μA	

Notes:
1. Input bias current is not included.
2. 50% duty cycle data.
3. 622.08Mbps, PRBS2^23-1, NRZ.
4. Vcc=+3.3V.
5. Tc=25°C.
6. Input Terminal is biased internally, as shown in the figure4. 7. 20-80%.
8. Refer to Section 8, "Relation between Disable Input Voltage and Optiical Output Power", for detail.

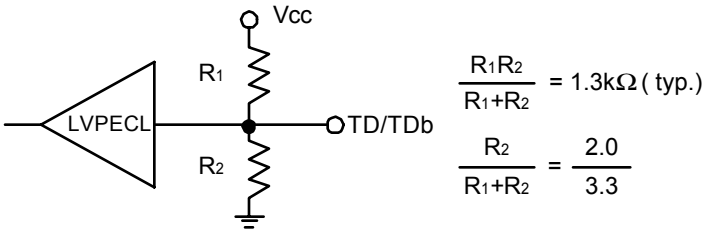

Figure 4. Internal Bias of Input Terminal

6-2. Receiver side

Parameter		Symbol	min.	Typ.	Max.	Unit	Note
Supply Voltage		Vcc-Vee	3.14	3.30	3.47	V	
Supply Current		Idrx		80	140	mA	1
RD, RDb Output Voltage	High	Vdoh	Vcc-1.10		Vcc-0.86	V	2
	Low	Vdol	Vcc-1.86		Vcc-1.62		
SD Output Voltage	High	Vsoh	Vcc-1.10		Vcc-0.86	V	2
	Low	Vsol	Vcc-1.89		Vcc-1.65		
Data Rise / Fall Time		Trd / Tfd			0.5	nsec.	3
SD Assert Time		Ta	2.3		100	μsec	4
SD Deassert Time		Td	2.3		100	μsec	

Notes:
1. Output current is not included. 622.08Mbps, PRBS2^23-1, NRZ.
2. Vcc=+3.3V, Tc=25°C. Output load resistance Rl=50Ω to Vcc-2V for RD, RDb, SD.
3. 20-80%.
4. 622.08Mbps, PRBS2^23-1, NRZ.

7. Optical Interface

(Unless otherwise specified, Vcc = 3.14 to 3.47 V and all operating temperature shall apply.)

7-1. Transmitter side

Parameter	Symbol	min.	Typ.	Max.	Unit	Note
Average Output Power	Po	-3.0	-0.5	2.0	dBm	1
Extinction Ratio	Er	10			dB	1
Center Wavelength	λc	1280		1335	nm	
Spectral Width (RMS)	Δλ			1.0	nm	
Eye Mask for Optical Output	Refer to Figure 5					

Notes:
1. Measured at 622.08Mbps PRBS2^23-1

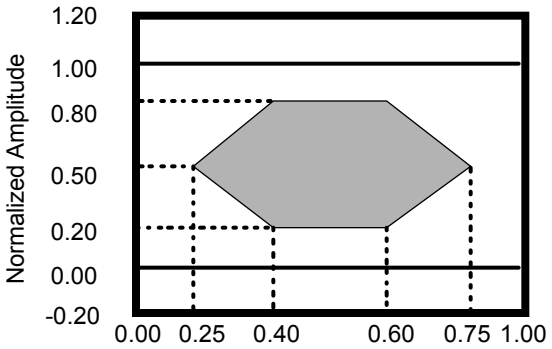

Figure 5. Optical Pulse Mask with Fourth Order Bessel-Thomson Filter Specified in ITU-T G.957

Relation between Input Signal and Optical Output Signal

Input Signal		Optical Output Signal
TD	TDb	
High	Low	ON (High)
Low	High	OFF (Low)
High	High	Undefined
Low	Low	Undefined

⚠ Warning

Do not look at the laser beam projection area (e.g. end of optical connector) with naked eyes or through optical equipment while the power is supplied to this product. Otherwise, your eyes may be injured.

7-2. Receiver side

Parameter	Symbol	min.	Typ.	Max.	Unit	Note
Optical Input Wavelength	-	1260		1580	nm	
Minimum Sensitivity	Pmin		-32.0	-28.0	dBm	1, 2
Overload	Pmax	-8.0			dBm	1, 2
SD Assert Level	Pa	-45.0		-28.0	dBm	2
SD Deassert Level	Pd	-45.0		-29.0	dBm	
SD Hysteresis	Phys	1.0		6.0	dB	

Notes:
1. BER=10^-10
2. Measured at the bit rate of 622.08Mbps, PRBS 2^23-1, NRZ

8. Relation between Disable Input Voltage and Optical Output Power

Tdis Input Voltage	Optical Output Power
"L"(0.0 ~ 0.8V)	Enabled
"H"(2.0V ~ Vcc)	Disabled (<-45dBm)
Open	Enabled

9. Recommended User Interface

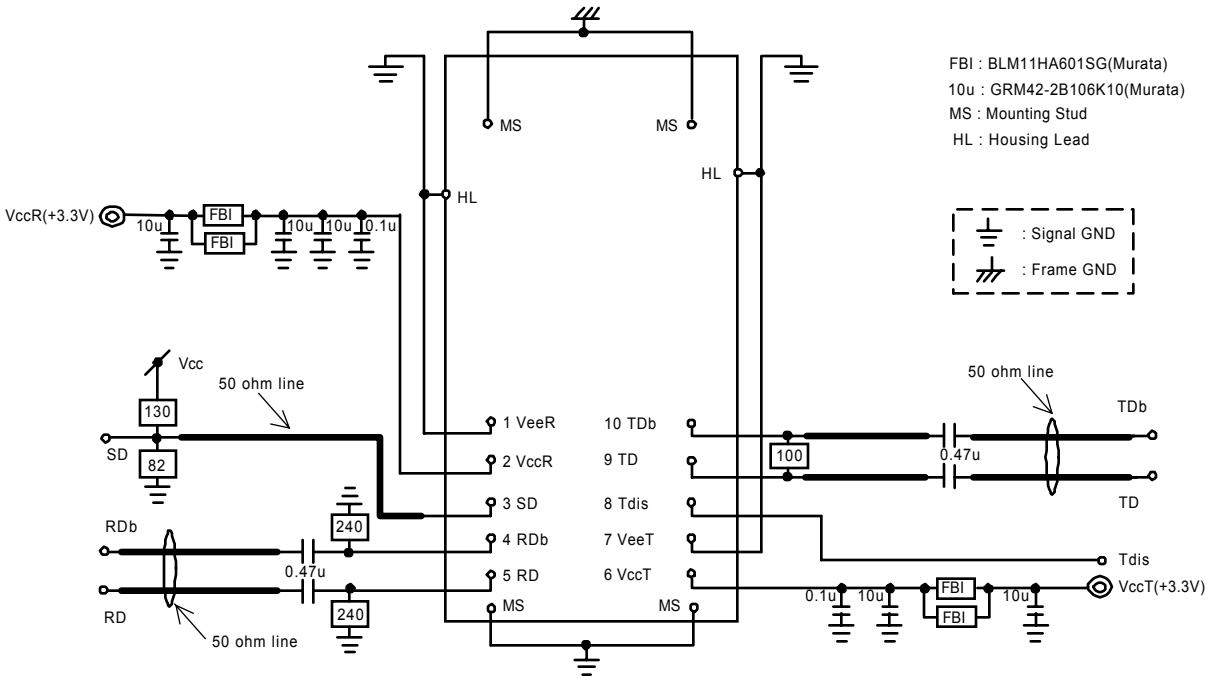

Notes:
(1) Components on RD/RDb lines,240Ω and 0.47u, should be placed as close as possible to module pins.
(2) 0.1u capacitors on VccR/VccT lines should be as close as possible to module pins.
(3) 50Ω line pattern and component placements on RD/RDb and TD/TDb lines shold be symmetrical for better impedance matching.
(4) HL is internally connected to VeeR and VeeT.

Figure 6. Recommended Interface Circuit

10. Reliability Test Program

GR-468-CORE Issue 1, December 1998 Laser Module

HEADING	TEST	REFERENCE	CONDITIONS	SAMPLING		
				LTPD	SS	C
Mechanical Integrity	Mechanical Shock	MIL-STD-883 Method 2002	5 times/axis 1,500G, 0.5ms	20	11	0
	Vibration	MIL-STD-883 Method 2007	Cond. A 20G, 20-2,000G Hz, 4min/cy, 4cy/axis	20	11	0
	Thermal Shock	MIL-STD-883 Method 1011	Delta T=100°C 0°C to 100°C	20	11	0
	Solderability	MIL-STD-883 Method 2003	(steam aging not required)	20	11	0
Endurance	Accel. Aging (High Temp.)	(R)-4-53 Section 5.18	85°C; rated power 1,000 hrs. for pass/fail 2,000, 5,000 hrs. for info.	-	25 10	-
	Low Temp. Storage	-	min. storage T 1,000 hrs. for pass/fail 2,000 hrs. for info.	20	11	0
	Temperature Cycling	Section 5.20	-40°C to +85°C 500 for pass/fail 1,000 for info.	20 -	11 11	0 -
	Damp Heat	MIL-STD-202 Method 103 or IEC-60068-2-3	85°C/85%RH 1,000hrs.	20	11	0
	Cyc. Moist. Res.	Sec. 5.23	-	20	11	0
Special Tests	Internal Moisture	MIL-STD-883 Method 1018	Max. 5,000ppm water vapour	20	11	0
	ESD Threshold	Section 5.22		-	6	-

SS : Sample Size

C : Maximum number of failure allowed to pass the test.

11. Laser Safety

This product uses a semiconductor laser system and is a laser class 1 product acceptable FDA, complies with 21CFR 1040. 10 and 1040.11. Also this product is a laser class 1 product acceptable IEC 825-1.

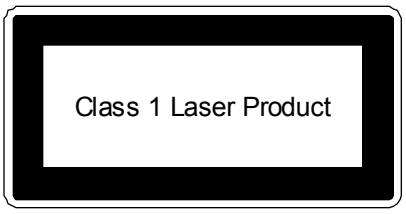

⚠ Caution

If this product is used under conditions not recommended in the specification or this product is used with unauthorized revision, classfication for laser product safety standard is invalid. Classify the product again at your responsibility and take appropriate actions.

12. Other Precaution

Under such a strong vibration environment as in automobile, the performance and reliability are not guaranteed.

The governmental approval is required to export this product to other countries. To dispose of these components, the appropriate procedure should be taken to prevent illegal exportation.

This module must be handled, used and disposed of according to your company's safe working practice.

⚠ Warning

Be sure to carry out correct soldering for connection to peripheral circuits in order to prevent contact failure or short-circuit. Otherwise, a strong laser beam may cause eye injury, overheating or fire.

Do not put this product or components of this product into your mouth. This product contaions material harmful to health.

⚠ Caution

Be sure to turn the power off when you touch this product connected to the printed circuit boards. Otherwise, electric shock may occur.

Dispose this product or equipment including this product properly as an industrial waste according to the regulations.

13. Ordering Information

Ordering Number	Connector Type	EMI Shield Finger Option	Operating Case Temperature
SCM6212-GL-ZN	LC Duplex Receptacle,Metallized	Without Finger	-5°C ~ 70°C
SCM6212-GL-CN	LC Duplex Receptacle,Metallized	With Type-C Finger	
SCM6212-GL-ZW	LC Duplex Receptacle,Metallized	Without Finger	-40°C ~ 85°C
SCM6212-GL-CW	LC Duplex Receptacle,Metallized	With Type-C Finger	

14. For More Information

U.S.A.
ExceLight Communications, 4021 Stirrup Creek Drive, Suite 200 Durham, NC 27703
Tel. +1-919-361-1600 / Fax. +1-919-361-1619
E-mail: info@excelight.com
http://www.excelight.com

Europe
Sumitomo Electric Europe Ltd., 220, Centennial Park, Elstree, Herts, WD6 3SL, United Kingdom
Tel.+44-208-953-8681
Fax.+44-208-207-5950
E-mail: photonics@sumielectric.com
http://www.sumielectric.com

Japan
Sumitomo Electric Industries, Ltd. (International Business Division), 3-12, Moto-Akasaka 1-chome
Minato-ku Tokyo 107-8468
Tel. +81-3-3423-5771 / Fax. +81-3-3423-5099
E-mail: product-info@ppd.sei.co.jp
http://www.sei.co.jp/Electro-optic/index_e.html