Bothhand USA email:sales@bothhandusa.com http://www.bothhandusa.com

10/100 BASE PULSE TRANSFORMER

P/N: 12PS6121AZ DATA SHEET

Feature

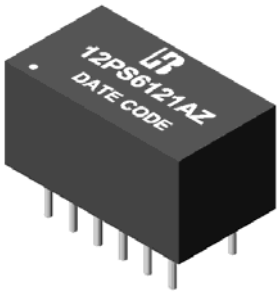

- Designed to meet IEEE 802.3u requirement, including 350uH OCL with 8mA bias.
- Operating temperature range: 0°C to +70°C.
- Storage temperature range: -25°C to +125°C.

Electrical Specifications @ 25°C

Part Number	Turns Ratio		OCL (uH Min) @ 100KHz/0.1V with 8mA DC Bias	$C_{W/W}$ (pF Max)	L.L (uH Max)	DCR (Ω Max)		HI-POT (Vrms)
	1-3:16-14	6-8:11-9				1-3/6-8	16-14/11-9	
12PS6121AZ	1CT:1CT	1CT:1CT	350	28	0.5	1.6	0.9	1500

Continue

Part Number	Insertion Loss (dB Max)	Return Loss (dB Min)			Cross talk (dB Min)		DCMR (dB Min)		
	0.3-100MHz	30MHz	60MHz	80MHz	0.3-60MHz	60-100MHz	30MHz	60MHz	100MHz
12PS6121AZ	-1.1	-14	-12	-10	-40	-35	-40	-35	-30

Schematic **Mechanical**

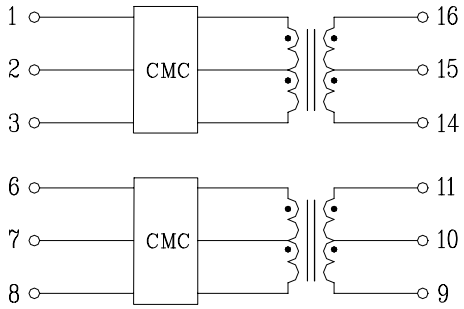

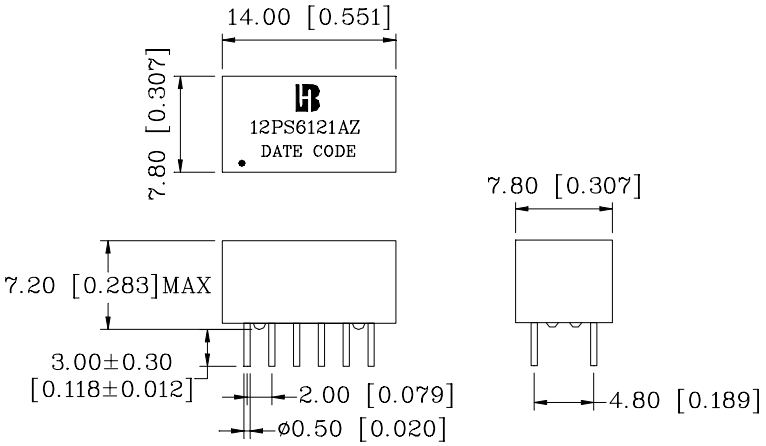

Units: mm[Inches] Tolerances: xx.x0±0.25[0.010]
0.xx±0.05[0.002]

462 Boston St - Topsfield, MA 01983 - Phone: 978-887-8050 - Fax: 978-887-5434