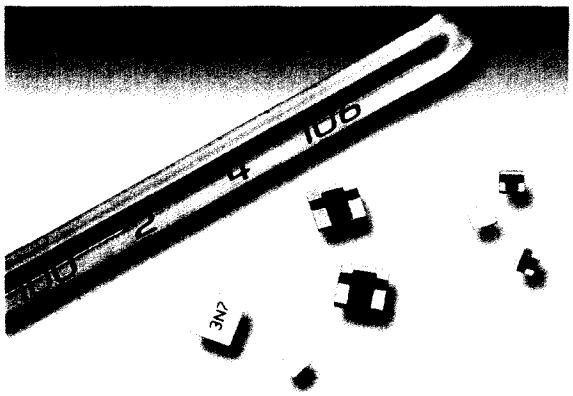

EMC Technology's TVA Thermopads are microwave absorbtive attenuators which provide power dissipation that varies with temperature and operate in frequency ranges from DC to 6 GHz. This surface mount, temperature variable attenuator requires no bias or control voltages and generates zero distortion. TVA Thermopads are also well suited for pre-amplified IF circuits.

General Specifications

Nominal Impedance ..... *50 Ohms Nominal*
Frequency Range ..... *DC to 6 GHz*
Attenuation Accuracy ..... *± 0.5 dB*
TCA Tolerance ..... *± 0.001 dB/dB/°C*
VSWR (Typical) ..... *1.30 @ 1 GHz*
Power Rating ..... *2.0 Watts*
Power Derating ..... *100% @ 125° C*
Derates to 0% @ 150° C
Operating Temperature ..... *-55° C to +150° C*

Material Specifications

Substrate ..... *Alumina*
Resistive Material ..... *Thick Film*
Termination Material .. *Thick Film, Nickel Barrier with Solder Plated Finish*

Usable Frequency Range Reference Table

CTVA ..... *DC to 2 GHz*
TVA, W1, W3 ..... *DC to 6 GHz*
MTVA, G (N3, N4, N5) ..... *DC to 18 GHz*
MTVA, G (N6, N7) ..... *DC to 12.4 GHz*
MTVA, W3, WB1, W1 ..... *DC to 12.4 GHz*
HTVA ..... *DC to 20 GHz*
KTVA ..... *18 to 46 GHz*
Coaxial TVA ..... *DC to 6 GHz*

Ordering Information

TVA 03 00 N 05 W3 S

SERIES
TVA

EMC CODE

NOMINAL ATTENUATION
01 = 1 dB
02 = 2 dB
03 = 3 dB
04 = 4 dB
05 = 5 dB
06 = 6 dB
07 = 7 dB
08 = 8 dB
09 = 9 dB
10 = 10 dB

TCA SLOPE
N = Negative
P = Positive

TCA (dB/dB/°C)
03 = .003
04 = .004
05 = .005
06 = .006
07 = .007
09 = .009

METALLIZATION
(blank) = Planar
W3 = Triple Wrap
W1 = Single Wrap

PRETINNING
(blank) = Standard
S = Pretinning
F = Lead Free
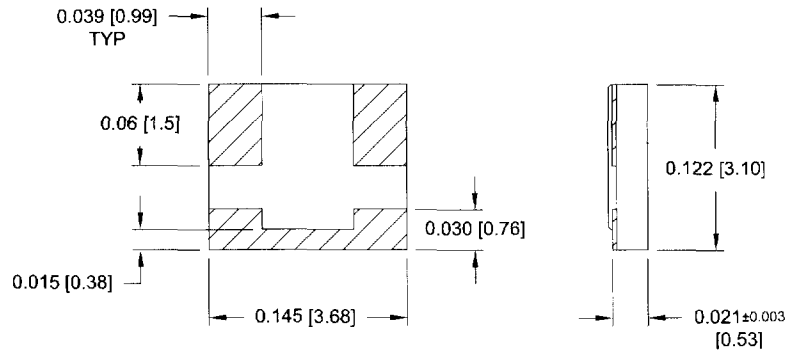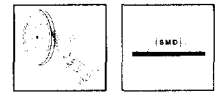
Product Dimensions