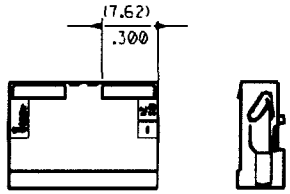

40555-AN
FEED TO WITH RAMP

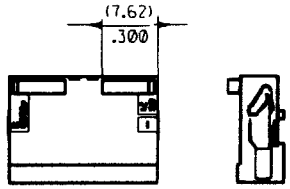

40555-BN
FEED TO WITH RAMP
AND POLARIZING RIBS

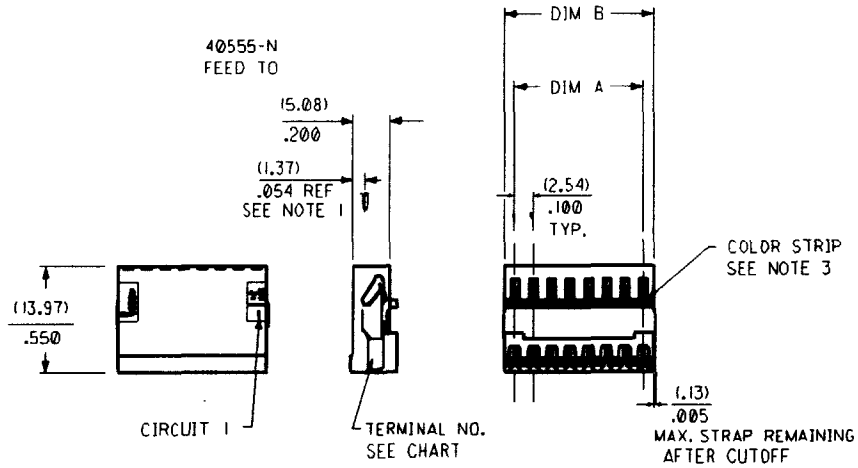

NO OF CKTS	DIM A	DIM B
2	(2.54) .100	(5.44) .214
3	(5.08) .200	(7.98) .314
4	(7.62) .300	(10.52) .414
5	(10.16) .400	(13.06) .514
6	(12.70) .500	(15.60) .614
7	(15.24) .600	(18.14) .714
8	(17.78) .700	(20.68) .814
9	(20.30) .800	(23.22) .914
10	(22.86) .900	(25.76) 1.014
11	(25.40) 1.000	(28.30) 1.114
12	(27.94) 1.100	(30.84) 1.214
13	(30.48) 1.200	(33.38) 1.314
14	(33.02) 1.300	(35.92) 1.414
15	(35.56) 1.400	(38.46) 1.514
16	(38.10) 1.500	(41.00) 1.614
17	(40.64) 1.600	(43.54) 1.714
18	(43.18) 1.700	(46.08) 1.814
19	(45.72) 1.800	(48.62) 1.914
20	(48.26) 1.900	(51.16) 2.014
21	(50.80) 2.000	(53.70) 2.114
22	(53.34) 2.100	(56.24) 2.214
23	(55.88) 2.200	(58.78) 2.314
24	(58.42) 2.300	(61.32) 2.414
25	(60.96) 2.400	(63.86) 2.514
26	(63.50) 2.500	(66.40) 2.614
27	(66.04) 2.600	(68.94) 2.714
28	(68.58) 2.700	(71.48) 2.814

40555

NOTES:

1. FOR USE WITH .025 SQ OR RD PINS. INSERTION DEPTH OF (6.10/7.87)/.240/.310
2. WIRE SPECIFICATIONS:
   TERMINAL OPTION -F(***) FOR USE WITH:
   24 AWG TOPCOATED WITH INSUL. DIA OF .058
   TERMINAL OPTION -H(***) FOR USE WITH:
   24 AWG TOPCOATED WITH INSUL. DIA OF .058
   24 AWG SOLID WITH INSUL. DIA OF .058
   24 AWG STRANDED WITH INSUL. DIA OF .058
   26 AWG TOPCOATED WITH INSUL. DIA OF .058
3. COLOR STRIPE TO RUN LENGTH OF RIB AS SHOWN
4. WIRE TERMINATION SPECIFICATION: SMES-7720-0002
5. PARTS CONFORM TO PRODUCT SPECIFICATION: SMES-7720-0001

A-40555- ✳ N ✳ ✳

HOUSING OPTIONS
BLANK=40555-N
A=40555-AN
B=40555-BN

NO. OF CKTS

TERMINAL OPTIONS
F=40554-F(102)
H=40627-H(102)
HA=40921-H(102)
HB=40554-H(102)
FA=40554-F(P904)
HE=40554-H(P904)
HF=41138-H(599)
A=7691-A(102)
HG=41138-H(587)
HK=41138-H(P904)

MOLEX01916

LTR.	REVISIONS	LTR.	REVISIONS
BG	ADD CIR 1 UCR1998-0078 98-3-17 SAMIEC	BF2	A/R 022416**5 ECN U70192 8-22-96 JJUNWANG
BF3	REV SMES-7720-0002 EC U80566 97-9-4 SAMIEC	BF1	REL -NHK ECR U60913 2-2-96 NGP
		BF	OBSOLETE OPTION C ECR U60671 1-24-96 NGP

MFG	SH.	REV.
8	BF2	
7	BF	
6	BF	
5	BF	
4	BF1	
3	BF	
2	BF	
1	BG	

DIMENSIONS SHOWN (METRIC) INCH
UNLESS OTHERWISE SPECIFIED TOLERANCES: ANGULAR ± 1/2°

	INCH	METRIC
3 PLACE	±	
2 PLACE	±	±
1 PLACE		±

DRAFT WHERE APPLICABLE MUST REMAIN WITHIN DIMENSIONS

DRWG. BY RJG
CHK'D. BY EDGLEY
APPD. BY LENZ
SCALE ±

▽ = 0 ▼ = 0 REVISE ONLY ON CAD SYSTEM

TITLE
INSULATION DISPLACEMENT CONNECTOR ASSEMBLY (2.54) / .100 CENTERS

MOLEX INCORPORATED USA,CHL 60637 U.S.A.
SHEET NO. 1 OF 8
DATE 9/16/85
PART NO. SEE CHARTS
DRWG. NO. SDA-40555-*N*
FILE NAME S40555X1
THIS DRAWING CONTAINS INFORMATION THAT IS PROPRIETARY TO MOLEX INC. AND SHOULD NOT BE USED WITHOUT WRITTEN PERMISSION.
DIV. C
SIZE C

40555

ENG. NO.	HOUSING NO	TERMINAL NO.	COLOR ID	EDP ON SHT./COL.
A-40555-NF	40555-N	40554-F(102)	NONE	5 / 1
A-40555-ANF	40555-AN	40554-F(102)	NONE	5 / 2
A-40555-BNF	40555-BN	40554-F(102)	NONE	5 / 3
				/
				/
				/
A-40555-NH	40555-N	40627-H(102)	GREEN	5 / 7
A-40555-ANH	40555-AN	40627-H(102)	GREEN	5 / 8
A-40555-BNH	40555-BN	40627-H(102)	GREEN	5 / 9
				/
				/
				/
A-40555-NHA	40555-N	40921-H(102)	GREEN	6 / 1
A-40555-ANHA	40555-AN	40921-H(102)	GREEN	6 / 2
A-40555-BNHA	40555-BN	40921-H(102)	GREEN	6 / 3
				/
				/
				/
A-40555-NFA	40555-N	40554-F(904)	NONE	6 / 7
A-40555-ANFA	40555-AN	40554-F(904)	NONE	6 / 8
A-40555-BNFA	40555-BN	40554-F(904)	NONE	6 / 9
				/
				/
				/
A-40555-NHF	40555-N	41138-H(599)	GREEN	7 / 1
A-40555-ANHF	40555-AN	41138-H(599)	GREEN	7 / 2
A-40555-BNHF	40555-BN	41138-H(599)	GREEN	7 / 3
				/
				/
				/
A-40555-NA	40555-N	7691-A102	BROWN	7 / 1
A-40555-ANA	40555-AN	7691-A102	BROWN	7 / 2
A-40555-BNA	40555-BN	7691-A102	BROWN	7 / 3
				/
				/
				/
A-40555-NHG	40555-N	41138-H(587)	GREEN	8 / 1
A-40555-ANHG	40555-AN	41138-H(587)	GREEN	8 / 2
A-40555-BNHG	40555-BN	41138-H(587)	GREEN	8 / 3
				/
				/
A-40555-NHK	40555-N	41138-H(P904)	GREEN	8 / 5
A-40555-ANHK	40555-AN	41138-H(P904)	GREEN	8 / 6
A-40555-BNHK	40555-BN	41138-H(P904)	GREEN	8 / 7

ENG. NO.	HOUSING NO	TERMINAL NO.	COLOR ID	EDP ON SHT./COL.
				/
				/
				/
				/
				/
				/
				/
				/
				/
				/
				/
				/
				/
				/
				/
				/
				/
				/
				/
				/
				/
				/
				/
				/
				/
				/
				/
				/
				/
				/
				/
				/
				/
				/
				/
				/
				/
				/
				/
				/
				/
				/
				/
				/

LTR.	REVISIONS	LTR.	REVISIONS
	SEE SHEET 1		SEE SHEET 1
	SEE SHEET 1	BF1	SEE SHEET 1
	SEE SHEET 1	BF	SEE SHEET 1
	SEE SHEET 1	BE6	SEE SHEET 1
	SEE SHEET 1	BE1	SEE SHEET 1
	SEE SHEET 1	BE	SEE SHEET 1
	SEE SHEET 1	BD	SEE SHEET 1

DIMENSIONS SHOWN (METRIC) INCH
UNLESS OTHERWISE SPECIFIED TOLERANCES: ANGULAR ± 1/2°

	INCH	METRIC
3 PLACE	±	
2 PLACE	±	±
1 PLACE		±

DRAFT WHERE APPLICABLE MUST REMAIN WITHIN DIMENSIONS

DRWG. BY SAMIEC | CHK'D. BY EDGLEY
APPD. BY LENZ | SCALE :

REVISE ONLY ON CAD SYSTEM

TITLE: INSULATION DISPLACEMENT CONNECTOR ASSEMBLY .100 CENTERS

MOLEX INCORPORATED LISLE, ILL. 60532 U.S.A. | SHEET NO. 4 | DATE 10/29/91

PART NO. SEE CHART | DWG. NO. SDA-40555-•N•

FILE NAME S40555X4 | THIS DRAWING CONTAINS INFORMATION THAT IS PROPRIETARY TO MOLEX INC. AND SHOULD NOT BE USED WITHOUT WRITTEN PERMISSION | DV. C | SIZE C

40555

A-40555-NF

PART NO.	ENG. NO.
22-41-8021	A-40555-2F
22-41-8031	A-40555-3F
22-41-8041	A-40555-4F
22-41-8051	A-40555-5F
22-41-8061	A-40555-6F
22-41-8071	A-40555-7F
22-41-8081	A-40555-8F
22-41-8091	A-40555-9F
22-41-8101	A-40555-10F
22-41-8111	A-40555-11F
22-41-8121	A-40555-12F
	A-40555-13F
	A-40555-14F
	A-40555-15F
	A-40555-16F
	A-40555-17F
	A-40555-18F
	A-40555-19F
	A-40555-20F
	A-40555-21F
	A-40555-22F
	A-40555-23F
	A-40555-24F
	A-40555-25F
	A-40555-26F
	A-40555-27F
	A-40555-28F

A-40555-ANF

PART NO.	ENG. NO.
	A-40555-A2F
	A-40555-A3F
	A-40555-A4F
	A-40555-A5F
	A-40555-A6F
	A-40555-A7F
	A-40555-A8F
	A-40555-A9F
	A-40555-A10F
	A-40555-A11F
	A-40555-A12F
	A-40555-A13F
	A-40555-A14F
	A-40555-A15F
	A-40555-A16F
	A-40555-A17F
	A-40555-A18F
	A-40555-A19F
	A-40555-A20F
	A-40555-A21F
	A-40555-A22F
	A-40555-A23F
	A-40555-A24F
	A-40555-A25F
	A-40555-A26F
	A-40555-A27F
	A-40555-A28F

A-40555-BNF

PART NO.	ENG. NO.
22-41-8022	A-40555-B2F
22-41-8032	A-40555-B3F
22-41-8042	A-40555-B4F
22-41-8052	A-40555-B5F
22-41-8062	A-40555-B6F
22-41-8072	A-40555-B7F
22-41-8082	A-40555-B8F
22-41-8092	A-40555-B9F
22-41-8102	A-40555-B10F
22-41-8112	A-40555-B11F
22-41-8122	A-40555-B12F
22-41-8132	A-40555-B13F
22-41-8142	A-40555-B14F
22-41-8152	A-40555-B15F
22-41-8162	A-40555-B16F
	A-40555-B17F
	A-40555-B18F
	A-40555-B19F
	A-40555-B20F
	A-40555-B21F
	A-40555-B22F
	A-40555-B23F
	A-40555-B24F
	A-40555-B25F
	A-40555-B26F
	A-40555-B27F
	A-40555-B28F

A-40555-NH

PART NO.	ENG. NO.
22-41-8025	A-40555-2H
22-41-8035	A-40555-3H
22-41-8045	A-40555-4H
22-41-8055	A-40555-5H
22-41-8065	A-40555-6H
22-41-8075	A-40555-7H
22-41-8085	A-40555-8H
22-41-8095	A-40555-9H
22-41-8105	A-40555-10H
22-41-8115	A-40555-11H
22-41-8125	A-40555-12H
22-41-8135	A-40555-13H
22-41-8145	A-40555-14H
22-41-8155	A-40555-15H
22-41-8165	A-40555-16H
22-41-8175	A-40555-17H
22-41-8185	A-40555-18H
22-41-8195	A-40555-19H
22-41-8205	A-40555-20H
22-41-8215	A-40555-21H
22-41-8225	A-40555-22H
22-41-8235	A-40555-23H
22-41-8245	A-40555-24H
22-41-8255	A-40555-25H
22-41-8265	A-40555-26H
22-41-8275	A-40555-27H
22-41-8285	A-40555-28H

A-40555-ANH

PART NO.	ENG. NO.
22-41-8029	A-40555-A2H
22-41-8039	A-40555-A3H
22-41-8049	A-40555-A4H
22-41-8059	A-40555-A5H
22-41-8069	A-40555-A6H
22-41-8079	A-40555-A7H
22-41-8089	A-40555-A8H
22-41-8099	A-40555-A9H
22-41-8109	A-40555-A10H
22-41-8119	A-40555-A11H
22-41-8129	A-40555-A12H
	A-40555-A13H
22-41-8149	A-40555-A14H
	A-40555-A15H
	A-40555-A16H
	A-40555-A17H
	A-40555-A18H
	A-40555-A19H
	A-40555-A20H
	A-40555-A21H
22-41-8229	A-40555-A22H
	A-40555-A23H
	A-40555-A24H
	A-40555-A25H
	A-40555-A26H
	A-40555-A27H
	A-40555-A28H

A-40555-BNH

PART NO.	ENG. NO.
	A-40555-B2H
	A-40555-B3H
	A-40555-B4H
	A-40555-B5H
	A-40555-B6H
	A-40555-B7H
	A-40555-B8H
	A-40555-B9H
	A-40555-B10H
	A-40555-B11H
	A-40555-B12H
	A-40555-B13H
	A-40555-B14H
	A-40555-B15H
	A-40555-B16H
	A-40555-B17H
	A-40555-B18H
	A-40555-B19H
	A-40555-B20H
	A-40555-B21H
	A-40555-B22H
	A-40555-B23H
	A-40555-B24H
	A-40555-B25H
	A-40555-B26H
	A-40555-B27H
	A-40555-B28H

MFG.	SH.	REV.	LTR.	REVISIONS
				SEE SHEET 1
				SEE SHEET 1
				SEE SHEET 1
				SEE SHEET 1
				SEE SHEET 1
			BF	SEE SHEET 1
			BD	SEE SHEET 1

▽ = 0 ▼ = 0 REVISE ONLY ON CAD SYSTEM

DIMENSIONS SHOWN METRIC/INCH

UNLESS OTHERWISE SPECIFIED TOLERANCES ANGULAR ± 1/2°

	INCH	METRIC
3 PLACE	±	
2 PLACE	±	±
1 PLACE		±

DRAFT WHERE APPLICABLE MUST REMAIN WITHIN DIMENSIONS

DRWN. BY SAMTEC CHK'D. BY EDGLEY APP'D. BY LENZ SCALE :

TITLE INSULATION DISPLACEMENT CONNECTOR ASSEMBLY .100 CENTERS

MOLEX INCORPORATED LISLE, ILL. 60532 U.S.A.

SHEET NO. 5 DATE 10/30/91

PART NO. SEE CHART DWG. NO. SDA-40555-•N•

FILE NAME S40555X5

THIS DRAWING CONTAINS INFORMATION THAT IS PROPRIETARY TO MOLEX INC. AND SHOULD NOT BE USED WITHOUT WRITTEN PERMISSION

REV. KK SIZE C