Order this document
by MMBR5179LT1/D

The RF Line
NPN Silicon High-Frequency Transistor

MMBR5179LT1

Designed for small–signal amplification at frequencies to 500 MHz. Specifically packaged for use in thick and thin–film circuits using surface mount components.

- High Gain — G_{pe} = 15 dB Typ @ f = 200 MHz
- Low Noise — NF = 4.5 dB Typ @ f = 200 MHz
- Available in tape and reel packaging options:
  T1 suffix = 3,000 units per reel

RF AMPLIFIER TRANSISTOR NPN SILICON

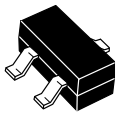

CASE 318–08, STYLE 6
SOT–23
LOW PROFILE
(TO–236AA/AB)

MAXIMUM RATINGS

Rating	Symbol	Value	Unit
Collector–Emitter Voltage	V_{CEO}	15	Vdc
Collector–Base Voltage	V_{CBO}	30	Vdc
Emitter–Base Voltage	V_{EBO}	3.0	Vdc
Collector Current — Continuous	I_C	50	mAdc
Maximum Junction Temperature	T_{Jmax}	150	°C
Power Dissipation, T_{case} = 75°C (1) Derate linearly above T_{case} = 75°C @	$P_{D(max)}$	0.375 5.00	W mW/°C

THERMAL CHARACTERISTICS

Characteristic	Symbol	Max	Unit
Storage Temperature	T_{stg}	–55 to +150	°C
Thermal Resistance Junction to Case	$R_{\theta JC}$	200	°C/W

DEVICE MARKING

MMBR5179LT1 = 7H

ELECTRICAL CHARACTERISTICS (T_A = 25°C unless otherwise noted)

Characteristic	Symbol	Min	Typ	Max	Unit
OFF CHARACTERISTICS					
Collector–Emitter Breakdown Voltage (I_C = 3.0 mAdc, I_B = 0)	$V_{(BR)CEO}$	15	—	—	Vdc
Collector–Base Breakdown Voltage (I_C = 0.001 mAdc, I_E = 0)	$V_{(BR)CBO}$	30	—	—	Vdc
Emitter–Base Breakdown Voltage (I_E = 0.01 mAdc, I_C = 0)	$V_{(BR)EBO}$	3.0	—	—	Vdc
Collector Cutoff Current (V_{CB} = 15 Vdc, I_E = 0)	I_{CBO}	—	—	0.02	μAdc
ON CHARACTERISTICS					
DC Current Gain (I_C = 3.0 mAdc, V_{CE} = 1.0 Vdc)	h_{FE}	30	—	250	—
Collector–Emitter Saturation Voltage (I_C = 10 mAdc, I_B = 1.0 mAdc)	$V_{CE(sat)}$	—	—	0.4	Vdc
Base–Emitter Saturation Voltage (I_C = 10 mAdc, I_B = 1.0 mAdc)	$V_{BE(sat)}$	—	—	1.0	Vdc
SMALL–SIGNAL CHARACTERISTICS					
Current–Gain — Bandwidth Product (I_C = 5.0 mAdc, V_{CE} = 6.0 Vdc, f = 100 MHz)	f_T	—	1,400	—	MHz
Collector–Base Capacitance (V_{CB} = 10 Vdc, I_E = 0, f = 0.1 to 1.0 MHz)	C_{cb}	—	—	1.0	pF
50 ohm Noise Figure (I_C = 1.5 mAdc, V_{CE} = 6.0 Vdc, R_S = 50 Ω, f = 200 MHz)	NF	—	4.5	—	dB
Common–Emitter Amplifier Power Gain (V_{CE} = 6.0 Vdc, I_C = 5.0 mAdc, f = 200 MHz)	G_{pe}	—	15	—	dB

NOTE:
1. Case temperature measured on collector lead immediately adjacent to body of package.

PACKAGE DIMENSIONS

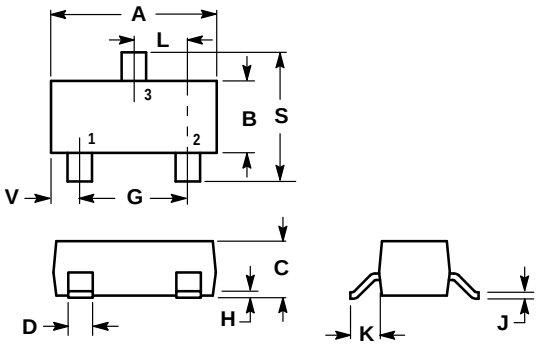

NOTES:
1. DIMENSIONING AND TOLERANCING PER ANSI Y14.5M, 1982.
2. CONTROLLING DIMENSION: INCH.
3. MAXIMUM LEAD THICKNESS INCLUDES LEAD FINISH THICKNESS. MINIMUM LEAD THICKNESS IS THE MINIMUM THICKNESS OF BASE MATERIAL.

	INCHES		MILLIMETERS	
DIM	MIN	MAX	MIN	MAX
A	0.1102	0.1197	2.80	3.04
B	0.0472	0.0551	1.20	1.40
C	0.0350	0.0440	0.89	1.11
D	0.0150	0.0200	0.37	0.50
G	0.0701	0.0807	1.78	2.04
H	0.0005	0.0040	0.013	0.100
J	0.0034	0.0070	0.085	0.177
K	0.0140	0.0285	0.35	0.69
L	0.0350	0.0401	0.89	1.02
S	0.0830	0.1039	2.10	2.64
V	0.0177	0.0236	0.45	0.60

STYLE 6:
PIN 1. BASE
2. EMITTER
3. COLLECTOR

CASE 318–08
ISSUE AF

How to reach us:
USA / EUROPE / Locations Not Listed: Motorola Literature Distribution;
P.O. Box 5405, Denver, Colorado 80217. 1–303–675–2140 or 1–800–441–2447

JAPAN: Nippon Motorola Ltd.: SPD, Strategic Planning Office, 141,
4–32–1 Nishi–Gotanda, Shagawa–ku, Tokyo, Japan. 03–5487–8488

Customer Focus Center: 1–800–521–6274

Mfax™: RMFAX0@email.sps.mot.com – TOUCHTONE 1–602–244–6609
Motorola Fax Back System – US & Canada ONLY 1–800–774–1848
– http://sps.motorola.com/mfax/

ASIA / PACIFIC: Motorola Semiconductors H.K. Ltd.; 8B Tai Ping Industrial Park,
51 Ting Kok Road, Tai Po, N.T., Hong Kong. 852–26629298

HOME PAGE: http://motorola.com/sps/