70 MHz Bandpass SAW Filter

36 MHz Bandwidth

BP60030

Specifications					
Parameter	Sym	Minimum	Typical	Maximum	Unit
Center Frequency at 25°C	fc	69.8	70	70.2	MHz
Insertion Loss at fc	IL	-	24.1	25.0	dB
1 dB Bandwidth	BW_1	32.7	33.8	-	MHz
3 dB Bandwidth	BW_3	36.0	37.4	-	MHz
40dB Bandwidth	BW_{40}	-	51.3	55.5	MHz
Passband Variation	-	-	0.3	1.3	dB
Phase Linearity	-	-	5.0	8.0	Deg
Group Delay Variation	-	-	15	30	nsec
Absolute Delay	-	-	2	-	µsec
Ultimate Rejection	-	50	55	-	dB
Substrate Material	-	-	128-$LiNbO_3$	-	-
Ambient Temperature	Ta	-	25	-	°C
Operating Temperature Range	To	-55	25	85	°C

Typical Performance

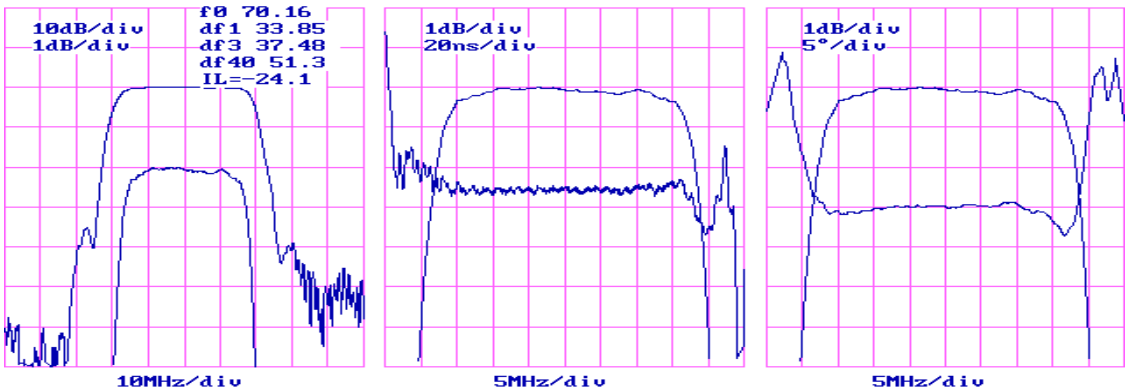

Package Outline

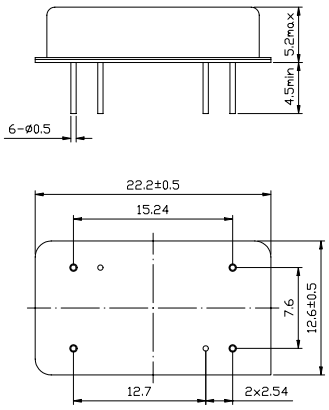

Matching Configuration

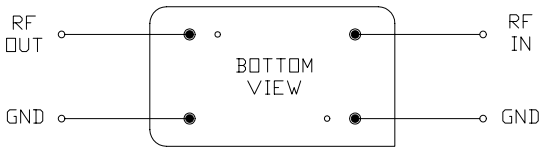

No Matching Required

Nominal Source/Load Impedance : 50 Ω