MATERIAL AND FINISH:
Insulator: Polycarbonate, UL-94V-0 rated
Contacts: Copper, Tin plated

ELECTRICAL SPECIFICATIONS:
Current rating: 10 A
Voltage rating: 250 VAC
Insulation resistance: 100 Mohm min. at 500 VDC
Dielectric withstanding voltage: 2000 VAC for one minute

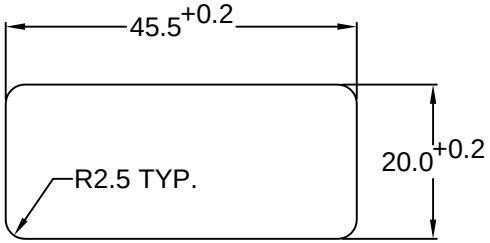

RECOMMENDED PANEL CUTOUT

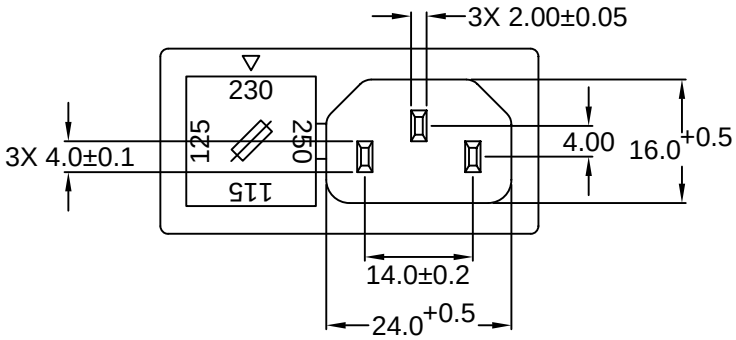

ORDERING CODE:
42R34-3 __ 2 __ - __ __ __
1 2 3

1) COLOR
1 = BLACK
2 = GRAY

2) ELECTRICAL CIRCUIT CONFIGURATION

1 = 10A 250V 70°C 2+GROUND

2 = 10A 250V 120°C 2+GROUND

4 = 10A 250V 70°C 2 POLE

3) PANEL THICKNESS

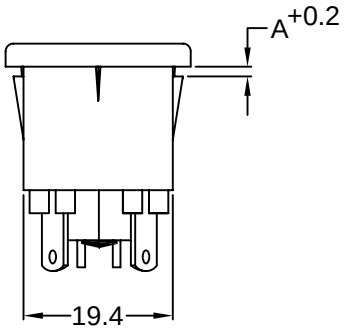

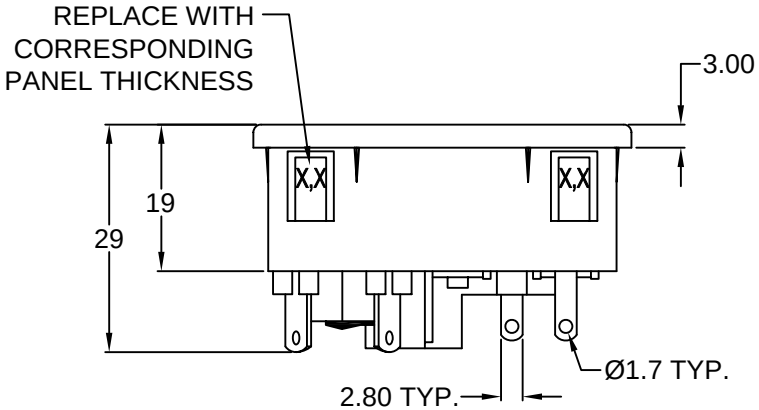

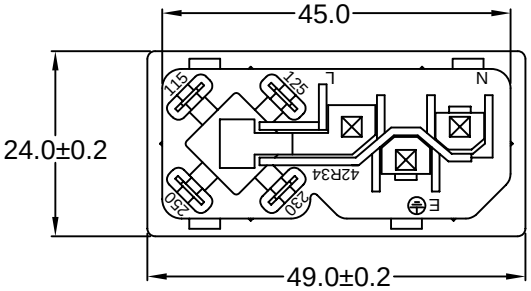

RoHS COMPLIANT

P/N	A	MAX. PANEL THICKNESS
42R34-3X2X-150	1.5	1.5
42R34-3X2X-200	2.0	2.0
42R34-3X2X-250	2.5	2.5

ADDITIONAL PANEL THICKNESS AVAILABLE ON REQUEST

TOLERANCE
UNLESS OTHERWISE SPECIFIED
X ± 1
X.X ± 0.4
X.XX ± 0.20

DRAWN BY	GQ	DATE:	09/13/01
CHECK BY	TD	DATE:	09/18/01
APPR BY	PB	DATE:	09/18/01

Power Dynamics, Inc.
Phone: 973 560-0019 Whippany, New Jersey Fax: 973 560-0076

PART: IEC 60320 APPL. INLET AND COMBINATION FUSE HOLDER; SOLDER TERMINALS; SNAP-IN

PART #: 42R34-3X2X-XXX

SHEET 1 of 1

SIZE: A

SCALE: NTS

ALL DIMENSIONS FOR REFERENCE ONLY
DIMENSIONS ARE IN MILLIMETERS

REV:

REVISIONS

REV	DATE	CHANGE	CHNG	CHCK	APPR