PROD NO
SEE NOTE

PERFORMANCE REQUIREMENT:

HOUSING : High Temperature Plastic (LCP), UL 94V-0
CONTACT : Copper Alloys
VOLTAGE RATING : 100VAC
CURRENT RATING : 0.5A
CONTACT RESISTANCE: 40 mΩ max.
INSULATION RESISTANCE: 1000MΩ max.
DIELECTRIC STRENGTH : 500VAC/1min
OPERATION TEMPERATURE : -40°C~85°C

Pin Type	Dim L±0.20	Pin Type
Detect	3.5 mm	25,26
General	4.25 mm	All Other Pins
Power	5.0 mm	1,13,38,50

10022312 - X 050

Contact Area Plating:
A: GOLD FLASH
C: GOLD 10u"
D: GOLD 15u"
E: GOLD 30u"

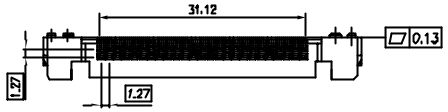

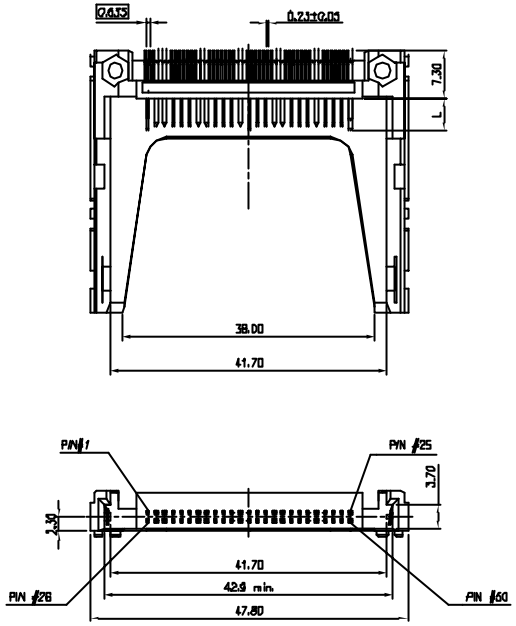

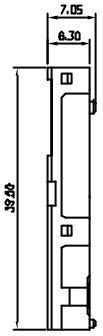

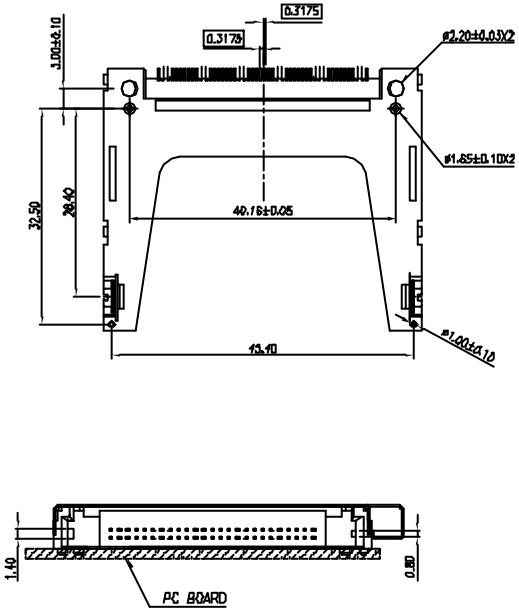

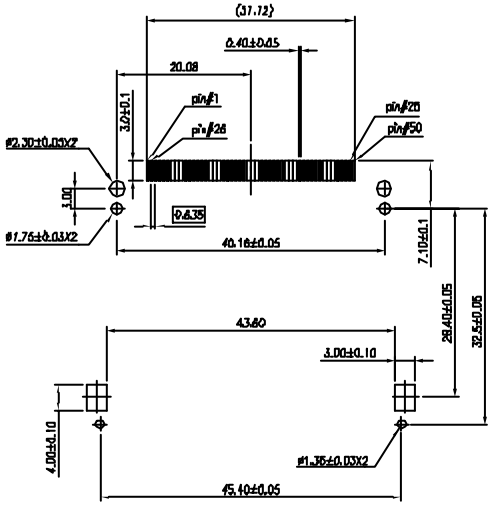

P.C.B Layout

mat'l. code				tolerances unless otherwise specified			CUSTOMER COPY	FCI www.fciconnect.com
ltr	ecn no	dr	date		.X ±.3			
A	T03-0176	J.C	8/6/03'	linear	.XX ±.2		projection	title CF Card 50 Pos SMT Header Type II (NORMAL)
					.XXX ±.10			
				angles	0° ±2°			
				dr	Jasmine Chang	8/6/03'	MM	product family CF / code –
				engr	Jason Hsu	8/6/03'		size A4 / dwg no 10022312
				chr	Jason Hsu	8/6/03'	scale N/A	
				appd	Sterling Lin	8/6/03'		sheet 1 of 1
sheet index	revision	A						
	sheet	1						

cage code 22526

Tous droits strictement reservés. Reproduction ou communication a des tiers interdite sous quelque forme que ce soit sans autorisation ecrite du propietaire. Propriete de c FCI. Droits de reproduction FCI.

All rights strictly reserved. Reproduction or issue to third parties in any form whatever is not permitted without written authority from the proprietor. Property of FCI. Copyright FCI.

PDM: Rev:A STATUS Released Printed: Oct 10, 2008