THIS DRAWING IS UNPUBLISHED. RELEASED FOR PUBLICATION -,- .
© COPYRIGHT - BY TYCO ELECTRONICS CORPORATION. ALL RIGHTS RESERVED.

LOC	DIST
FT	0

REVISIONS

P	LTR	DESCRIPTION	DATE	DWN	APVD
	AD1	REVISED PER ECO-06-3414	2/22/06	SS	SH
	AD2	REVISED PER ECO-09-020935	11SEP09	KK	AEG

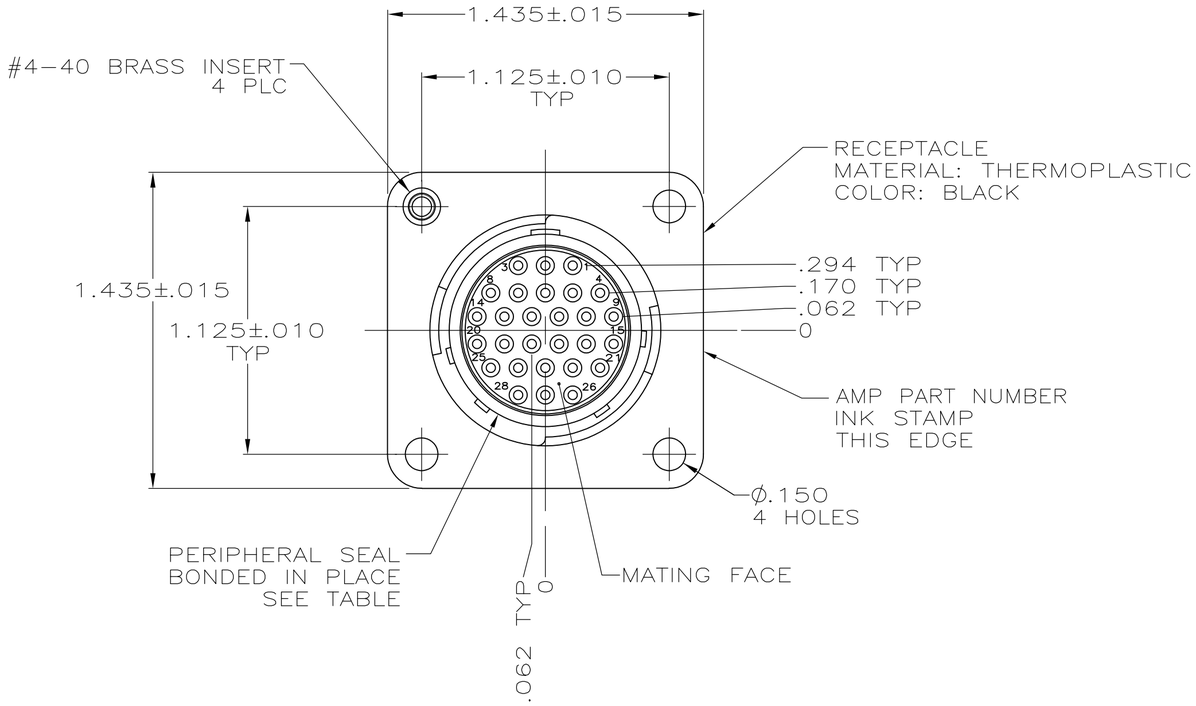

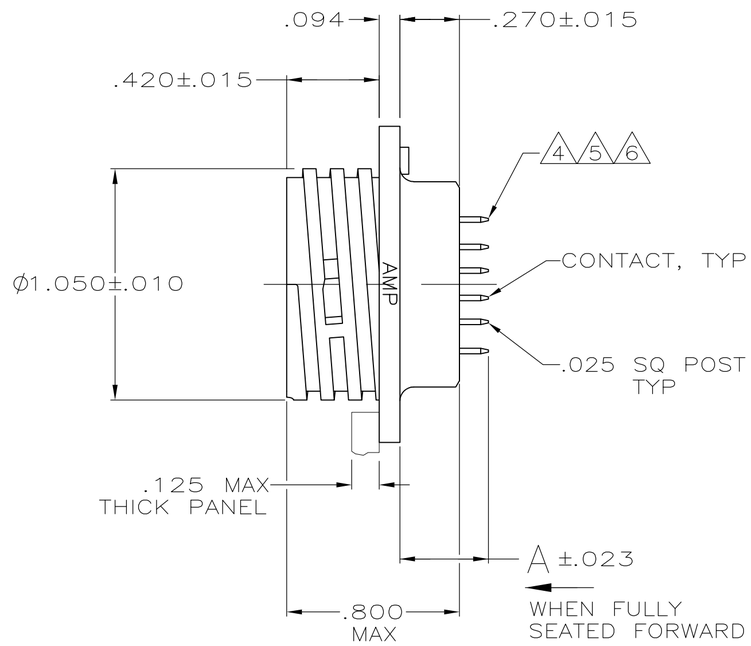

1. CONTACT CAVITIES IDENTIFIED BY CHARACTERS ON FRONT AND REAR FACE OF CONNECTOR.

2. GOLD FLASH FOR A LENGTH OF .100 MIN FROM MATING END, .000100 MIN TIN-LEAD FOR A LENGTH OF DIMENSION 'A' FROM OPPOSITE END, ALL OVER .000050 MIN NICKEL.

3. .000030 MIN GOLD FOR A LENGTH OF .100 MIN FROM MATING END, .000100 MIN TIN-LEAD FOR A LENGTH OF DIMENSION 'A' FROM OPPOSITE END, ALL OVER .000050 MIN NICKEL.

4. CONTACTS TO BE SELECTIVELY LOADED INTO POSITIONS 1, 3, 4, 8, 14, 15, 21, 25, 26, 27 AND 28; FOR -1 ONLY.

5. CONNECTOR TO BE FULLY LOADED FOR -2, -3, -6, AND -8.

6. CONTACTS TO BE SELECTIVELY LOADED INTO POSITIONS 1 THRU 27; FOR -9 ONLY.

7. .000030 MIN GOLD FOR A LENGTH OF .100 MIN FROM MATING END, .000100 MIN TIN FOR A LENGTH OF DIMENSION 'A' FROM OPPOSITE END, ALL OVER .000050 MIN NICKEL.

8. GOLD FLASH FOR A LENGTH OF .100 MIN FROM MATING END, .000100 MIN TIN-LEAD FOR A LENGTH OF DIMENSION 'A' FROM OPPOSITE END, ALL OVER .000050 MIN NICKEL.

9. OBSOLETE PARTS: OBSOLETE CIS STREAMLINING PER D.RENAUD/D.SINISI

	SEAL	THREADED INSERT	CONTACT FINISH	A	PART NUMBER
	NO	YES	8	.851	2-207216-1
9	NO	YES	8	.402	2-207216-0
OBSOLETE	NO	YES	8	.402	1-207216-9
	YES	NO	8	.851	1-207216-8
	NO	NO	7	.629	1-207216-7
	NO	NO	8	.402	1-207216-6
9 OBSOLETE	NO	NO	7	.629	1-207216-4
PRELIMINARY	NO	YES	3	.629	1-207216-3
PRELIMINARY	NO	YES	3	.851	1-207216-2
9	NO	YES	2	.402	1-207216-1
OBSOLETE	NO	YES	2	.402	1-207216-0
	YES	NO	2	.851	207216-9
	NO	NO	3	.629	207216-8
OBSOLETE	NO	YES	3	.629	207216-6
OBSOLETE	NO	YES	2	.402	207216-3
	NO	NO	2	.402	207216-2
OBSOLETE	NO	NO	2	.402	207216-1

207216

THIS DRAWING IS A CONTROLLED DOCUMENT.

DIMENSIONS: INCHES

TOLERANCES UNLESS OTHERWISE SPECIFIED:
0 PLC ± -
1 PLC ± -
2 PLC ± -
3 PLC ± .005
4 PLC ± -
ANGLES ± -

MATERIAL: SEE CALLOUT
FINISH: SEE TABLE

DWN J. GALLUCCI BG 5-22-91
CHK W.G. LENKER 4-14-92
APVD K. BEAVER 4-14-92
PRODUCT SPEC 108-10024
APPLICATION SPEC —
WEIGHT —

Tyco Electronics
Tyco Electronics Corporation
Harrisburg, PA 17105-3608

NAME: RECEPTACLE ASSEMBLY, POSTED, RVS SEX, 17-28, SERIES 2, CPC
—

SIZE	CAGE CODE	DRAWING NO	RESTRICTED TO
A2	00779	C-207216	—

CUSTOMER DRAWING | SCALE 2:1 | SHEET 1 OF 1 | REV AD2