THIS DRAWING IS UNPUBLISHED. RELEASED FOR PUBLICATION -,- .
© COPYRIGHT - BY TYCO ELECTRONICS CORPORATION. ALL RIGHTS RESERVED.

LOC	DIST
AD	14

REVISIONS

P	LTR	DESCRIPTION	DATE	DWN	APVD
	G	REVISED PER EC 0G3C-0205-05	21FEB06	SSK	MM

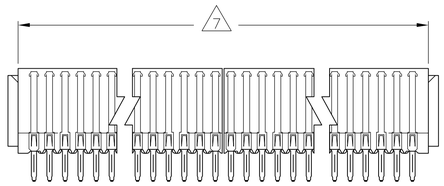

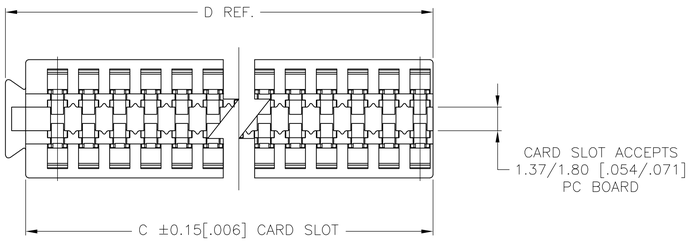

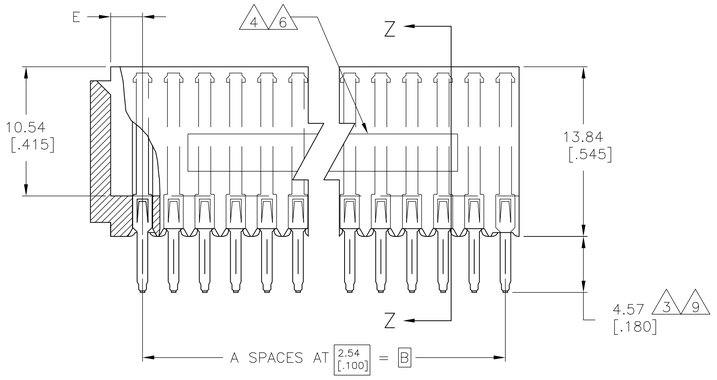

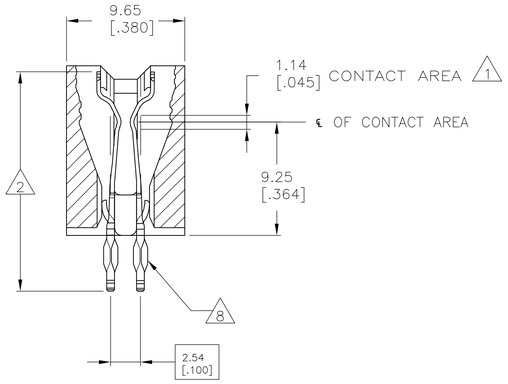

SECTION Z-Z

1. GOLD PL .00076[.000030] MIN. THK. PER MIL-G-45204
2. NICKEL PL .00127[.000050] MIN. THK. PER QQ-N-290
3. SOLDER PL .00254[.000100] MIN. THK.
4. STAMPED P/N & DATE CODE.
5. OPTIONAL: CARD GUIDE (BASE NO 117169)
6. ALL PARTS ASSEMBLED IN MEXICO MUST BE STAMPED "ASSY IN MEXICO".THE WORD "MEXICO" CAN BE SUBSTITUTED ONLY WHERE PART SIZE PROHIBITS STAMPING "ASSY IN MEXICO", INK COLOR WHITE PER 115-9009, APPROX WHERE SHOWN, SIDE OPTIONAL.
7. CARD SLOT DIMENSIONS FOR TOTAL CONNECTOR (BOTH HALVES) IS (#POSN - 1)(2.54[.100]) + 2E. TOLERANCE IS 0.216[.0085] PLUS THE TRUE POSITION TOLERANCE ON THE BOARD HOLES.
8. ACTION PIN REQUIRES 2.13[.084] MIN THK PC BOARD.

REQUIRED HOLE DIAMETER TOLERANCES FOR COMPLIANT SECTION							
REQ'D DRILL SIZE	HOLE DIA ±.03[.001]	PLATING THICKNESS		HOLE DIAMETER		COPPER HARDNESS (KNOOP)	PAD DIA MIN
		COPPER	TIN/LEAD	AFTER PLATING	AFTER REFLOW		
1.15mm	1.15 [.0453]	0.03-0.08 [.001-.003]	0.008 MIN [.0003] MIN	0.94-1.09 [.037-.043]	0.914-1.09 [.0036-.043]	150 MAX	1.57 [.062]
1.15mm	1.15 [.0453]	NOT PLATED THRU					1.65 [.065]

9. MATTE TIN PL. .00254[.000100] MIN. THK.

	E	D	C	B	A	POSN	PART NO.
	2.59 [.102]	91.72 [3.611]	90.07 [3.546]	86.36 [3.400]	34	35	5-119831-6
OBSOLETE	~~2.59 [.102]~~	~~155.22 [6.111]~~	~~153.57 [6.046]~~	~~149.86 [5.900]~~	~~59~~	~~60~~	3-119831-1
							3-119831-0
							2-119831-9
							2-119831-8
							2-119831-7
OBSOLETE	~~2.59 [.102]~~	~~142.52 [5.611]~~	~~140.87 [5.546]~~	~~137.16 [5.400]~~	~~54~~	~~55~~	2-119831-6
							2-119831-5
							2-119831-4
							2-119831-3
							2-119831-2
							2-119831-1
							2-119831-0
							1-119831-9
OBSOLETE	~~2.59 [.102]~~	~~122.20 [4.811]~~	~~120.55 [4.746]~~	~~116.84 [4.600]~~	~~46~~	~~47~~	1-119831-8
							1-119831-7
							1-119831-6
							1-119831-5
							1-119831-4
							1-119831-3
OBSOLETE	~~2.59 [.102]~~	~~106.96 [4.211]~~	~~105.31 [4.146]~~	~~101.60 [4.000]~~	~~40~~	~~41~~	1-119831-2
							1-119831-1
							1-119831-0
							119831-9
							119831-8
							119831-7
	2.59 [.102]	91.72 [3.611]	90.07 [3.546]	86.36 [3.400]	34	35	119831-6
OBSOLETE	~~2.59 [.102]~~	~~89.18 [3.511]~~	~~87.53 [.3446]~~	~~83.82 [3.300]~~	~~33~~	~~34~~	119831-5
							119831-4
							119831-3
							119831-2
OBSOLETE	~~2.59 [.102]~~	~~79.02 [3.111]~~	~~77.37 [3.046]~~	~~73.66 [2.900]~~	~~29~~	~~30~~	119831-1

THIS DRAWING IS A CONTROLLED DOCUMENT.

DIMENSIONS: mm [INCHES]

TOLERANCES UNLESS OTHERWISE SPECIFIED:
0 PLC ± -
1 PLC ± -
2 PLC ± -
3 PLC ± 0.25 [.010]
4 PLC ± -
ANGLES ± -

MATERIAL: HOUSING: VALOX 420 SEO,BLUE CONTACTS: COPPER NICKEL

FINISH: 1 2 3 9

DWN H.BAKERMANS 16-FEB-93
CHK H. ROSE 8/18/94
APVD H. ROSE 8/18/94
PRODUCT SPEC —
APPLICATION SPEC 114-26002
WEIGHT —
CUSTOMER DRAWING

tyco Electronics
Tyco Electronics Corporation
Harrisburg, Pa 17105-3608

NAME: CONNECTOR, AMP PACE .100x.100

SIZE	CAGE CODE	DRAWING NO	RESTRICTED TO
A1	00779	C-119831	—

SCALE 4:1 SHEET 1 OF 1 REV G