PRODUCT NUMBER: SEE NEXT SHEET(S)

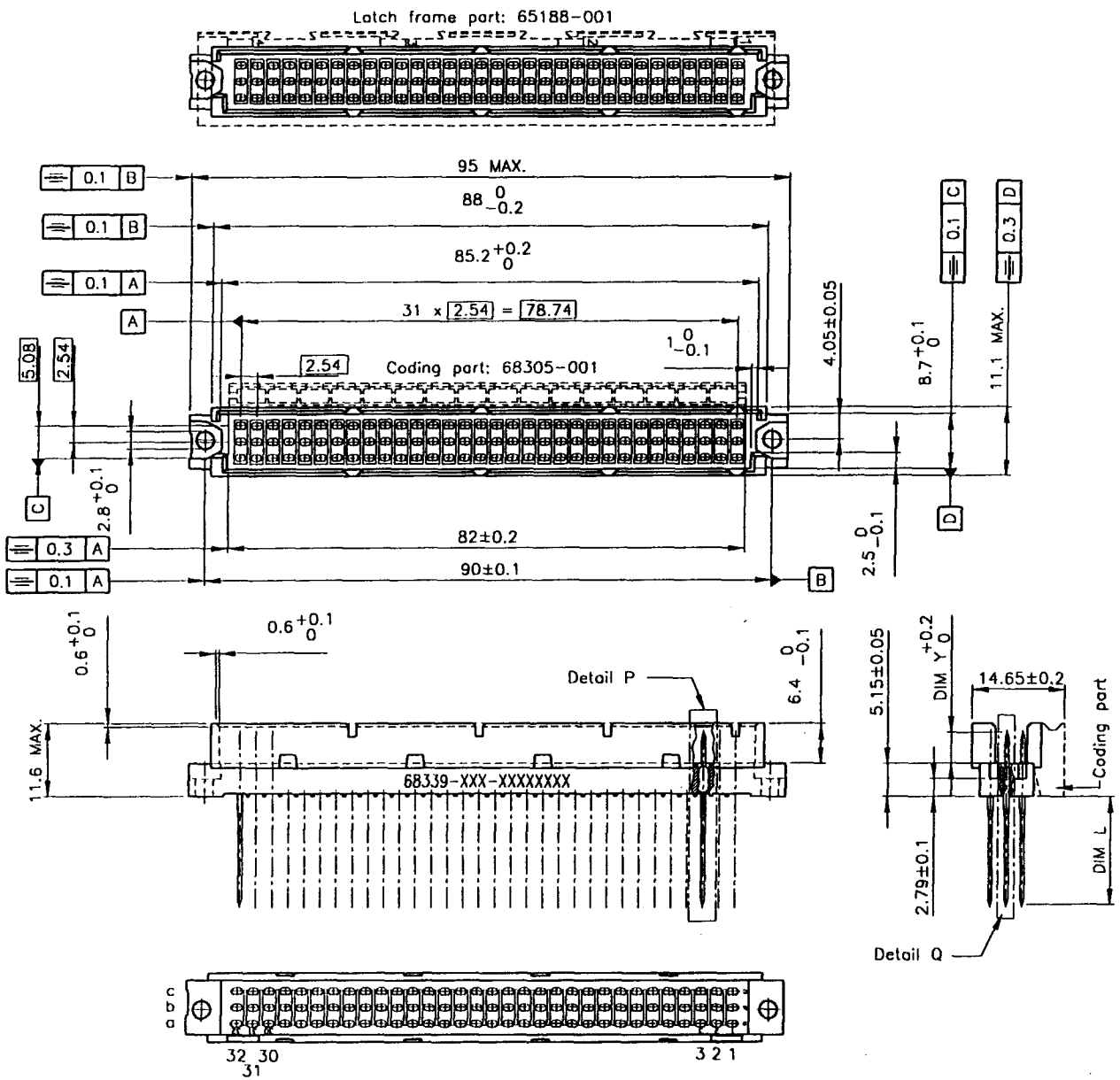

NOTES:

1. MAT'L BODY: THERMOPLASTIC POLYESTER 30% GLASS-FILLED, COLOUR: SEE TABLE, FLAME RETARDANT PER UL-94-VO. PIN: PHOSPHOR BRONZE
2. FOR REPAIR SEE TA 562.A AND TA 562.B.
3. PRINTING CONSISTS OF: 68339-XXX-XXXXXXXX
   PRODUCT NUMBER
   DASH NUMBER
   BATCH CODE
4. CONNECTORS WITH ADVANCED EARTH CONTACT REQUIRE ACCURATE P.C.B. DAUGHTER CARD GUIDANCE.
5. NORMAL CONTACT "X" AND "+", DIM Y=4.80mm
   F.M.L.B. CONTACT "O", DIM Y=5.50mm
   CONTACT "Δ", DIM Y=4.00mm
   ALL PIN LENGTHS ARE POSSIBLE IN ALL POSITIONS

mat'l code SEE TABLE				tolerances unless otherwise specified		CUSTOMER COPY	FCI ELECTRONICS www.fciconnect.com
ltr	eco no	dr	date	linear		projection	title P.L.P.F MALE CONNECTOR
CD	F90154	DLE	99.03.03				
CE	F90395	LMU	99.07.12				
CF	F90849	JFN	99.10.15	angles		mm	product family BACK PANEL / code 213
CG	F00150	DLE	00.03.13	dr M.WISSCHERS	99.05.03		size A2 / dwg no 68339
CH	F00183	DLE	00.03.20	engr NOTTEAU.JF	99.07.12	scale 1:1	sheet 1 of 15
				chk D. MATHEVON	99.07.12		
				appd JF.N	98.07.12		

sheet index	revision sheet	CH	M	R	U	P	P	M	M	X	V	K	R	M	M	L				
		1	2	3	4	5	6	7	8	9	10	11	12	13	14	15				

PRODUCT NO	PIN "O" AND "X" PLACED IN POSITION																																		PLATING THICKNESS				PIN LENGTH DIM L	CODING PART	PRODUCT NR REPAIR PINS	COLOUR BODY	REMARKS
	ROW	1	2	3	4	5	6	7	8	9	10	11	12	13	14	15	16	17	18	19	20	21	22	23	24	25	26	27	28	29	30	31	32		CONTACT AREA F	CONTACT AREA G	PRESS FIT AREA V	TRANSITION AREA Z					
68339-296	a																																												
	b																																												
	c																																												
68339-297	a																																												
	b																																												
	c																																												
68339-298	a																																												
	b																																												
	c																																												
68339-299	a																																												
	b																																												
	c																																												
68339-300	a																																												
	b																																												
	c																																												
68339-301	a	O	O	O	O	O	O	O	X	X	X	X	X	X	X	X	X	X	X	X	X	X	X	O	X	O	X	X	X	X	X	X	X		0.40 µm Au min.	N/A	1-3 µm SnPb	2-5 µm SnPb	6	to be ordered SEPARATELY	X: 77402-701 O: 77402-711	GREY	
	b	X	X	X	X	X	X	X	X	X	X	X	X	X	X	X	X	X	X	X	X	X	X	X	X	X	X	X	X	X	X	X	O												
	c	O	O	O	O	O	O	O	X	X	X	X	X	X	X	X	X	X	X	X	X	X	X	O	X	O	X	X	X	X	X	X	X												
68339-302	a	X	X	X	X	X	X	X	X	X	X	X	X	X	X	X	X	X	X	X	X	X	X	X	X	X	X	X	X	O	O	O	O		0.40 µm Au min.	N/A	1-3 µm SnPb	2-5 µm SnPb	6	to be ordered SEPARATELY	X: 77402-701 O: 77402-711	GREY	
	b	X	X	X	X	X	X	X	X	X	X	X	X	X	X	X	X	X	X	X	X	X	X	X	X	X	X	X	X	X	X	X	X												
	c	X	X	X	X	X	X	X	X	X	X	X	X	X	X	X	X	X	X	X	X	X	X	X	X	X	X	X	X	O	O	O	O												
68339-303	a	O	O	X	X	X	X	X	X	X	X	X	X	X	X	X	X	X	X	X	X	X	X	X	X	X	X	X	X	X	X	X	X		0.40 µm Au min.	N/A	1-3 µm SnPb	2-5 µm SnPb	6	to be ordered SEPARATELY	X: 77402-701 O: 77402-711	GREY	
	b	X	X	X	X	X	X	X	X	X	X	X	X	X	X	X	X	X	X	X	X	X	X	X	X	X	X	X	X	X	X	X	X												
	c	O	O	X	X	X	X	X	X	X	X	X	X	X	X	X	X	X	X	X	X	X	X	X	X	X	X	X	X	X	X	X	X												
68339-304	a	Δ	Δ	Δ	Δ	Δ	Δ	Δ	Δ	Δ	Δ	Δ	Δ	Δ	Δ	Δ	Δ	Δ	Δ	Δ	Δ	Δ	Δ	Δ	Δ	Δ	Δ	Δ	Δ	Δ	Δ	Δ	Δ		2 µm Au min.	N/A	1-3 µm SnPb	2-5 µm SnPb	6	to be ordered SEPARATELY	Δ: 77402-708	GREY	
	b																																												
	c	Δ	Δ	Δ	Δ	Δ	Δ	Δ	Δ	Δ	Δ	Δ	Δ	Δ	Δ	Δ	Δ	Δ	Δ	Δ	Δ	Δ	Δ	Δ	Δ	Δ	Δ	Δ	Δ	Δ	Δ	Δ	Δ												
68339-305	a	X	X	X	X	X	X	X	X	X	X	X	X	X	X	X	X	X	X	X	X	X	X	X	X	X	X	X	X	X	X	O	O		2 µm Au min.	N/A	1-3 µm SnPb	2-5 µm SnPb	6	to be ordered SEPARATELY	X: 77402-701 O: 77402-711	GREY	
	b																																												
	c	X	X	X	X	X	X	X	X	X	X	X	X	X	X	X	X	X	X	X	X	X	X	X	X	X	X	X	X	X	X	O	O												
68339-306	a	Δ	Δ				Δ	Δ					Δ	Δ				Δ	Δ			Δ	Δ	Δ	Δ	Δ	Δ	Δ	Δ	Δ	Δ	Δ	X		0.80 µm Au min.	N/A	1-3 µm SnPb	2-5 µm SnPb	6	to be ordered SEPARATELY	X: 77402-701 Δ: 77402-708	GREY	
	b			Δ	Δ					Δ	Δ											Δ	Δ	Δ	Δ	Δ	Δ	Δ	Δ	Δ	Δ	Δ	X												
	c	Δ	Δ					Δ	Δ			Δ	Δ			Δ	Δ			Δ	Δ	Δ	Δ	Δ	Δ	Δ	Δ	Δ	Δ	Δ	Δ	X	X												
68339-307	a	X	Δ	Δ	Δ	Δ	Δ	Δ	Δ	Δ	Δ	Δ	Δ	Δ	Δ	Δ	Δ	Δ	Δ	Δ	Δ	Δ	Δ	Δ	Δ	Δ	Δ	Δ	Δ	Δ	Δ	Δ	X		0.80 µm Au min.	N/A	1-3 µm SnPb	2-5 µm SnPb	6	to be ordered SEPARATELY	X: 77402-701 Δ: 77402-708	GREY	
	b	X	Δ	Δ	Δ	Δ	Δ	Δ	Δ	Δ	Δ	Δ	Δ	Δ	Δ	Δ	Δ	Δ	Δ	Δ	Δ	Δ	Δ	Δ	Δ	Δ	Δ	Δ	Δ	Δ	Δ	Δ	X												
	c	X	Δ	Δ	Δ	Δ	Δ	Δ	Δ	Δ	Δ	Δ	Δ	Δ	Δ	Δ	Δ	Δ	Δ	Δ	Δ	Δ	Δ	Δ	Δ	Δ	Δ	Δ	Δ	Δ	Δ	Δ	X												
68339-308	a	X	X	X	X	X	X	X	Δ	Δ	Δ	Δ	Δ	Δ	Δ	Δ	Δ	Δ	Δ	Δ	Δ	Δ	Δ	Δ	Δ	Δ	Δ	Δ	Δ	Δ	Δ	X	X		0.80 µm Au min.	N/A	1-3 µm SnPb	2-5 µm SnPb	6	to be ordered SEPARATELY	X: 77402-701 Δ: 77402-708	GREY	
	b	X	Δ	Δ	Δ	Δ	Δ	Δ	Δ	Δ	Δ	Δ	Δ	Δ	Δ	Δ	Δ	Δ	Δ	Δ	Δ	Δ	Δ	Δ	Δ	Δ	Δ	Δ	Δ	Δ	Δ	X	X												
	c	X	X	X	X	X	X	X	Δ	Δ	Δ	Δ	Δ	Δ	Δ	Δ	Δ	Δ	Δ	Δ	Δ	Δ	Δ	Δ	Δ	Δ	Δ	Δ	Δ	Δ	Δ	X	X												
68339-309	a	X	X	X	X	X	X	X	X	X	X	X	X	X	X	X	X	X	X	X	X	X	X	X	X	X	X	X	X	X	X	X	X		0.80 µm Au min.	N/A	1-3 µm SnPb	2-5 µm SnPb	6	to be ordered SEPARATELY	X: 77402-701 Δ: 77402-708	GREY	
	b	X	X	X	X	X	X	X	X	X	X	X	X	X	X	X	X	X	X	X	X	X	X	X	X	X	X	X	X	X	X	X	X												
	c	X	X	X	X	X	X	X	X	Δ	Δ	Δ	Δ	Δ	Δ	Δ	Δ	Δ	Δ	Δ	Δ	Δ	Δ	Δ	Δ	Δ	Δ	Δ	Δ	Δ	Δ	X	X												
68339-310	a	X	X	X	X	O	X	X	X	X	X	X	X	X	X	X	X	X	X	X	X	X	X	X	X	X	X	X	X	X	X	X	O		0.80 µm Au min.	N/A	1-3 µm SnPb	2-5 µm SnPb	6	to be ordered SEPARATELY	X: 77402-701 O: 77402-711	GREY	
	b																																												
	c	O	X	X	O	X	X	X	X	X	X	X	X	X	X	X	X	X	X	X	X	X	X	X	X	X	X	X	X	X	X	X	O												
68339-311	a	X	X	X	O	X	X	X	X	X	X	X	X	X	X	X	X	X	X	X	X	X	X	X	X	X	X	X	X	X	X	X	O		0.80 µm Au min.	N/A	1-3 µm SnPb	2-5 µm SnPb	6	to be ordered SEPARATELY	X: 77402-701 O: 77402-711	GREY	
	b	X	X	X	X	X	X	X	X	X	X	X	X	X	X	X	X	X	X	X	X	X	X	X	X	X	X	X	X	X	X	X	O												
	c	O	X	X	O	X	X	X	X	X	X	X	X	X	X	X	X	X	X	X	X	X	X	X	X	X	X	X	X	X	X	X	O												
68339-312	a	X	X	X	X	X	X	X	X	O	X	X	X	X	X	X	X	X	X	X	X	X	X	X	X	X	X	X	X	X	X	X	O		0.80 µm Au min.	N/A	1-3 µm SnPb	2-5 µm SnPb	6	to be ordered SEPARATELY	X: 77402-701 O: 77402-711	GREY	
	b	X	X	X	X	X	X	X	X	X	X	X	X	X	X	X	X	X	X	X	X	X	X	X	X	X	X	X	X	X	X	X	O												
	c	O	X	X	X	X	O	X	X	X	X	X	X	X	X	X	X	X	X	X	X	X	X	X	X	X	X	X	X	X	X	X	O												
68339-313	a	X	X	X	X	X	X	X	X	X	O	O	O	O	O	X	X	X	X	X	X	X	X	X	X	X	X	X	X	X	X	X	X		1.25 µm Au min.	1.25 µm Au min.	gold flash	gold flash	13	to be ordered SEPARATELY	X: 77402-101 O: 77402-112	GREY	
	b	X	X	X	X	X	X	X	X	X	O	O	O	O	O	X	X	X	X	X	X	X	X	X	X	X	X	X	X	X	X	X	X												
	c	X	X	X	X	X	X	X	X	X	O	O	O	O	O	X	X	X	X	X	X	X	X	X	X	X	X	X	X	X	X	X	X												
68339-314	a	X	X	X	X	X	X	X	X	X	O	O	O	O	O																				1.25 µm Au min.	1.25 µm Au min.	gold flash	gold flash	13	to be ordered SEPARATELY	X: 77402-101 O: 77402-112	GREY	
	b	X	X	X	X	X	X	X	X	X	O	O	O	O	O																														
	c	X	X	X	X	X	X	X	X	X	O	O	O	O	O																														
68339-315	a	O			X			Δ		Δ		X	Δ	O	X	Δ	O	Δ	O	Δ	Δ	O	Δ	Δ	Δ	O	Δ	Δ	O	Δ	Δ	Δ	O		1.25 µm Au min.	N/A	1-3 µm SnPb	N/A	6	to be ordered SEPARATELY	X: 77402-701 O: 77402-711 Δ: 77402-708	GREY	
	b	O			Δ					Δ		Δ	Δ	Δ	Δ	O	Δ	O	Δ	O	Δ	O	Δ	O	Δ	O	Δ	O	Δ	O	Δ	Δ	O											
	c	O			Δ			Δ		Δ		X	Δ	O	X	Δ	O	Δ	O	Δ	O	Δ	O	Δ	Δ	Δ	O	Δ	Δ	O	Δ	Δ	O											
68339-316	a	Δ	Δ	Δ	Δ	Δ	Δ	Δ	Δ	Δ	Δ	Δ	Δ	Δ	Δ	Δ	Δ	X	X	Δ	Δ	Δ	Δ	X	Δ	Δ	Δ	Δ	Δ	Δ	Δ	Δ	Δ		1.25 µm Au min.	N/A	1-3 µm SnPb	N/A	6	to be ordered SEPARATELY	X: 77402-701 Δ: 77402-708	GREY	
	b	Δ	Δ	Δ	Δ	Δ	Δ	Δ	Δ	Δ	Δ	Δ	Δ	Δ	Δ	Δ	Δ	X	X	Δ	Δ	Δ	Δ	X	Δ	Δ	Δ	Δ	Δ	Δ	Δ	Δ	Δ												
	c	Δ	Δ	Δ	Δ	Δ	Δ	Δ	Δ	Δ	Δ	Δ	Δ	Δ	Δ	Δ	Δ	X	X	Δ	Δ	Δ	Δ	X	Δ	Δ	Δ	Δ	Δ	Δ	Δ	Δ	Δ												
68339-317	a																																												
	b																																												
	c																																												
68339-318	a																																												
	b																																												
	c																																												
68339-319	a																																												
	b																																												
	c																																												
68339-320	a																																												
	b																																												
	c																																												

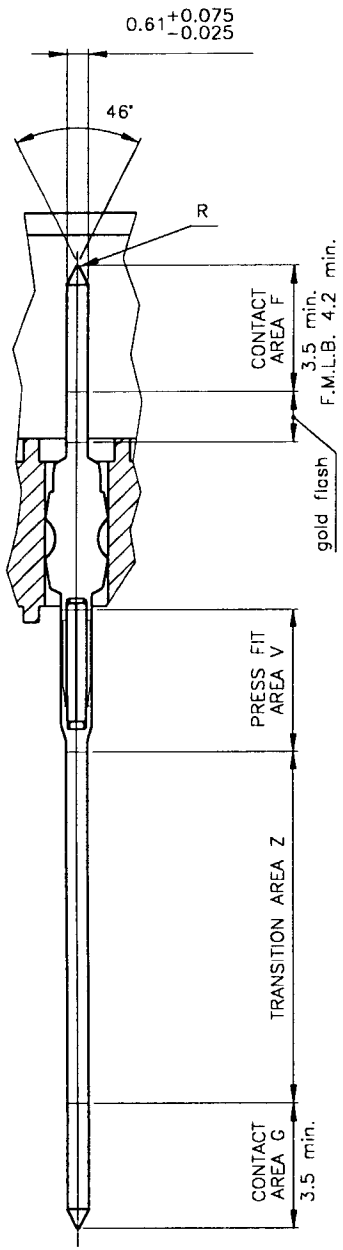

DETAIL P
SCALE 10:1

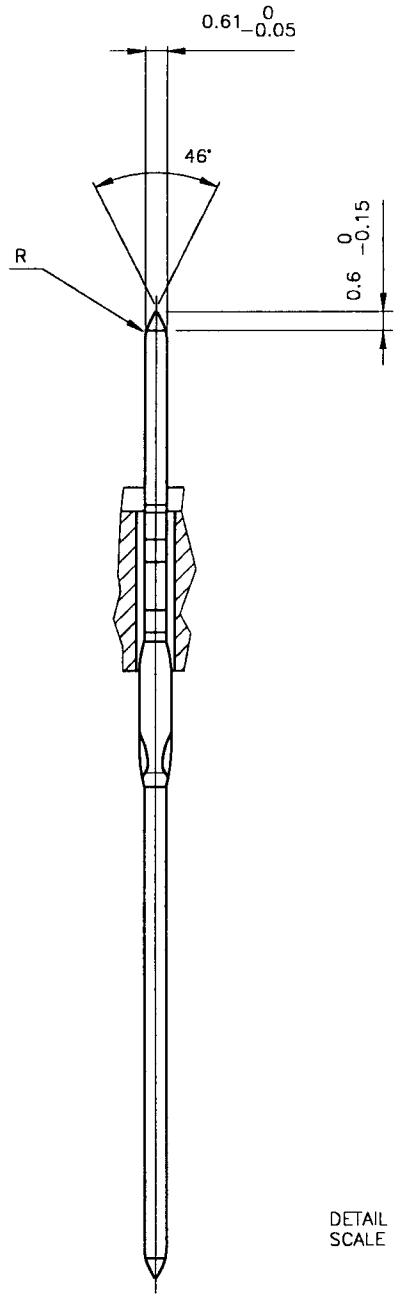

DETAIL Q
SCALE 10:1

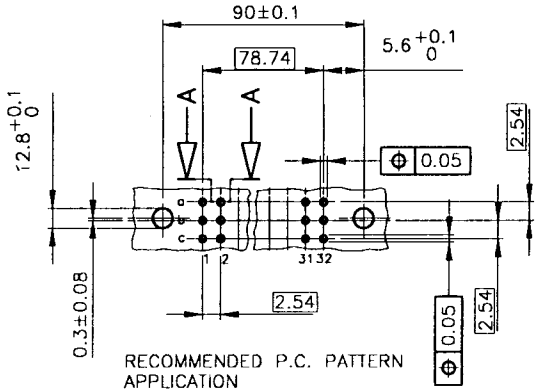

RECOMMENDED P.C. PATTERN APPLICATION

DRILLED HOLE ø1.15±0.025 DIA.

COPPER PLATING 0.025 MIN. 0.075 MAX.

TIN/LEAD PLATING 0.005 MIN. 0.015 MAX.

FINISHED HOLE ø0.94 MIN. ø1.09 MAX.

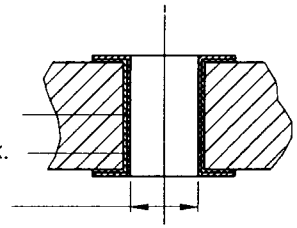

SECTION A–A
scale 20:1

mat'l code SEE TABLE				tolerances unless otherwise specified		CUSTOMER COPY	FCI ELECTRONICS www.fciconnect.com
ltr	ecn no	dr	date	linear		projection	title P.L.P.F MALE CONNECTOR
L	H30577	MVI	93.08.17	angles		mm	
W	F90395	LMU	99.07.12	dr	M.VISSCHERS	91.05.06	product family BACK PANEL
				engr	NOTTEAU.JF	99.07.12	size A2 dwg no 68339
				chr	D. MATHEVON	99.07.12	scale 1:1
				appd	JF.N	99.07.12	code 213
sheet index	revision sheet						sheet 2 of –

| PRODUCT NO | PIN "O" AND "X" PLACED IN POSITION | | |

PRODUCT NO	PIN "O" AND "X" PLACED IN POSITION (ROW a / b / c, pins 1–32)	PLATING THICKNESS: CONTACT AREA F	CONTACT AREA G	PRESS FIT AREA V	TRANSITION AREA Z	PIN LENGTH DIM L	CODING PART	PRODUCT NR REPAIR PINS	COLOUR BODY	REMARKS
68339-026	a: X X X X X X X X X X X X X X X X b: X X X X X X X X X X X X X X X X c:	1.25 µm Au min.	2–5 µm SnPb	1–3 µm SnPb	2–5 µm SnPb	20	FITTED	X: 77402-706	GREY	
68339-027	a: O X X X X X X X X X X X X X X X X X X X X X X X X X X X X X X X O b: O X X X X X X X X X X X X X X X X X X X X X X X X X X X X X X X O	1.25 µm Au min.	1.25 µm Au min.	gold flash	gold flash	20	FITTED	X: 77402-106 O: 77402-115	GREY	
68339-028	a: X X X X X X X X X X X X X X X X b: X X X X X X X X X X X X X X X X c:	1.25 µm Au min.	1.25 µm Au min.	gold flash	gold flash	20	FITTED	X: 77402-106	GREY	
68339-029	a: O X X X X X X X X X X X X X X X X X X X X X X X X X X X X X X X O b: c: X X X X X X X X X X X X X X X X X X X X X X X X X X X X X X X X	0.80 µm Au min.	0.80 µm Au min.	gold flash	gold flash	20	to be ordered SEPARATELY	X: 77402-106 O: 77402-115	GREY	
68339-030	a: O X X X X X X X X X X X X X X X X X X X X X X X X X X X X X X X O b: c: X X X X X X X X X X X X X X X X X X X X X X X X X X X X X X X X	0.80 µm Au min.	2–5 µm SnPb	1–3 µm SnPb	2–5 µm SnPb	20	to be ordered SEPARATELY	X: 77402-706 O: 77402-715	GREY	
68339-031	a: O X X X X X X X X X X X X X X X X X X X X X X X X X X X X X X X O b: X X X X X X X X X X X X X X X X X X X X X X X X X X X X X X X X c: X X X X X X X X X X X X X X X X X X X X X X X X X X X X X X X X	0.80 µm Au min.	0.80 µm Au min.	gold flash	gold flash	20	to be ordered SEPARATELY	X: 77402-106 O: 77402-115	GREY	
68339-032	a: O X X X X X X X X X X X X X X X X X X X X X X X X X X X X X X X O b: X X X X X X X X X X X X X X X X X X X X X X X X X X X X X X X X c: X X X X X X X X X X X X X X X X X X X X X X X X X X X X X X X X	0.80 µm Au min.	2–5 µm SnPb	1–3 µm SnPb	2–5 µm SnPb	20	to be ordered SEPARATELY	X: 77402-706 O: 77402-715	GREY	
68339-033	a: X X X X X X X X X X X X X X X X b: c: X X X X X X X X X X X X X X X X	1.25 µm Au min.	2–5 µm SnPb	1–3 µm SnPb	2–5 µm SnPb	13	to be ordered SEPARATELY	X: 77402-705	GREY	
68339-034	a: X X X X X X X X X X X X X X X X b: c: X X X X X X X X X X X X X X X X	1.25 µm Au min.	1.25 µm Au min.	gold flash	gold flash	13	FITTED	X: 77402-105	GREY	
68339-035	a: X X X X X X X X X X X X X X X X b: c: X X X X X X X X X X X X X X X X	1.25 µm Au min.	1.25 µm Au min.	gold flash	gold flash	13	FITTED	X: 77402-105	GREY	
68339-036	a: O X O X X X X X X X X X O X X X X X X O X X X X X X X X X X X X X X b: c: X X X X X X X X X X X X X X X X X X X X X X X X X X X X X X X X	0.80 µm Au min.	0.80 µm Au min.	gold flash	gold flash	13	FITTED	X: 77402-105 O: 77402-112	GREY	
68339-037	a: O X X X X X X X X X X X X X X O b: c: O X X X X X X X X X X X X X X O	0.40 µm Au min.	2–5 µm SnPb	1–3 µm SnPb	2–5 µm SnPb	6	to be ordered SEPARATELY	X: 77402-701 O: 77402-711	GREY	
68339-038	a: X X X X X X X X X X X X X X X X X X X X X X X X X X X X X X X X X X b: O O O c: X X X X X X X X X X X X X X X X X X X X X X X X X X X X X X X X	0.80 µm Au min.	2–5 µm SnPb	1–3 µm SnPb	2–5 µm SnPb	6	to be ordered SEPARATELY	X: 77402-701 O: 77402-711	GREY	
68339-039	a: O O X X X X X X X X X X X X X X X X X X X X X X X X O X X X X X O O b: O O O O O O O O O O O O O O O O O O O O O O O O O O O O O O O O c: O O X X X X X X X X X X X X X X X X X X X X X X X X O X X X X X O O	1.25 µm Au min.	1.25 µm Au min.	gold flash	gold flash	20	to be ordered SEPARATELY	X: 77402-106 O: 77402-115	GREY	
68339-040	a: O O X X X X X X X X X X X X X X X X X X X X X X X X X X X X X X O O b: O O O O O O O O O O O O O O O O O O O O O O O O O O O O O O O O c: O O X X X X X X X X X X X X X X X X X X X X X X X X X X X X X X O O	1.25 µm Au min.	1.25 µm Au min.	gold flash	gold flash	20	to be ordered SEPARATELY	X: 77402-106 O: 77402-115	GREY	
68339-041	a: O O X X O O O O O O O O O O X X O X X X X O X O O O O O O b: c: O O X X O O O O O O O O O O O X X O X X X X X O O O O O	0.40 µm Au min.	2–5 µm SnPb	1–3 µm SnPb	2–5 µm SnPb	6	to be ordered SEPARATELY	X: 77402-701 O: 77402-711	GREY	
68339-042	a: X X X X X X X X X X X X X X X X X X X X X X X X X X X X X X X X X X b: O O O O O O O O O O O O O O O O O O O O O O O O O O O O O O O O c: X X X X X X X X X X X X X X X X X X X X X X X X X X X X X X X X	0.40 µm Au min.	2–5 µm SnPb	1–3 µm SnPb	2–5 µm SnPb	13	to be ordered SEPARATELY	X: 77402-705	GREY	
68339-043	a: b: c:									
68339-044	a: X X X X X b: O O O O O X c: X X X X X	0.80 µm Au min.	2–5 µm SnPb	1–3 µm SnPb	2–5 µm SnPb	6	to be ordered SEPARATELY	X: 77402-701	GREY	
68339-045	a: O X X X X X X X X X X X X X X X X X X X X X X X X X X X X X X X O b: c: X X X X X X X X X X X X X X X X X X X X X X X X X X X X X X X X	0.40 µm Au min.	2–5 µm SnPb	1–3 µm SnPb	2–5 µm SnPb	6	to be ordered SEPARATELY	X: 77402-701 O: 77402-711	GREY	
68339-046	a: O X X X X X X X X X X X X X X X X X X X X X X X X X X X X X X X O b: X X X X X X X X X X X X X X X X X X X X X X X X X X X X X X X X c: X X X X X X X X X X X X X X X X X X X X X X X X X X X X X X X X	0.40 µm Au min.	2–5 µm SnPb	1–3 µm SnPb	2–5 µm SnPb	6	to be ordered SEPARATELY	X: 77402-701 O: 77402-711	GREY	
68339-047	a: O X X X X X X X X X X X X X X X X X X X X X X X X X X X X X X X O b: c: X X X X X X X X X X X X X X X X X X X X X X X X X X X X X X X X	0.40 µm Au min.	0.40 µm Au min.	gold flash	gold flash	13	to be ordered SEPARATELY	X: 77402-105 O: 77402-112	GREY	
68339-048	a: O X X X X X X X X X X X X X X X X X X X X X X X X X X X X X X X O b: X X X X X X X X X X X X X X X X X X X X X X X X X X X X X X X X c: X X X X X X X X X X X X X X X X X X X X X X X X X X X X X X X X	0.40 µm Au min.	0.40 µm Au min.	gold flash	gold flash	13	to be ordered SEPARATELY	X: 77402-105 O: 77402-112	GREY	
68339-049	a: X X X X X X X X X X X X X X X X b: X X X X X X X X X X X X X X X X c: X X X X X X X X X X X X X X X X	1.25 µm Au min.	1.25 µm Au min.	gold flash	gold flash	13	to be ordered SEPARATELY	X: 77402-105	GREY	
68339-050	a: O X X X X X X X X X X X X X X X X X X X X X X X X X X X X X X X O b: c: O X X X X X X X X X X X X X X X X X X X X X X X X X X X X X X X O	0.40 µm Au min.	0.40 µm Au min.	gold flash	gold flash	13	to be ordered SEPARATELY	X: 77402-105 O: 77402-112	GREY	

ECC TABLE					
nr	ECR NR	ID	date		
1	H40488	DOB	01.07.17		
2	F80385	LMJ	05.07.12		

tolerances unless otherwise specified

drawn

projection

mm

scale 1:1

CUSTOMER COPY

FCI ELECTRONICS

www.fciconnect.com

title P.L.P.F

MALE CONNECTOR

product family BACK PANEL

code 213

size A1

dwg no 68339

sheet 4 of –

PRODUCT NO	ROW	PIN "O" AND "X" PLACED IN POSITION	PLATING THICKNESS CONTACT AREA F	CONTACT AREA G	PRESS FIT AREA V	TRANSITION AREA Z	PIN LENGTH	CODING PARDIM L	PRODUCT NR REPAIR PINS	COLOUR BODY	REMARKS
		1 2 3 4 5 6 7 8 9 10 11 12 13 14 15 16 17 18 19 20 21 22 23 24 25 26 27 28 29 30 31 32									
68339-051	a	O	0.40 µm Au min.	0.40 µm Au min.	gold flash	gold flash	13	to be ordered SEPARATELY	X: 77402-105 O: 77402-112	GREY	
	b	X X X X X X X X X X X X X X X X X X X X X X X X X X X X X X X X									
	c	O X X X X X X X X X X X X X X X X X X X X X X X X X X X X X X O									
68339-052	a	O X X X X X X X X X X X X X X X X X X X X X X X X X X X X X X O	0.40 µm Au min.	0.40 µm Au min.	gold flash	gold flash	13	to be ordered SEPARATELY	X: 77402-105 O: 77402-112	GREY	
	b	X X X X X X X X X X X X X X X X X X X X X X X X X X X X X X X X									
	c	O X X X X X X X X X X X X X X X X X X X X X X X X X X X X X X O									
68339-053	a	O X X X X X X X X X X X X X X X X X X X X X X X X X X X X X X O	0.40 µm Au min.	0.40 µm Au min.	gold flash	gold flash	13	to be ordered SEPARATELY	X: 77402-105 O: 77402-112	GREY	
	b	X X X X X X X X X X X X X X X X X X X X X X X X X X X X X X X X									
	c	O X X X X X X X X X X X X X X X X X X X X X X X X X X X X X X O									
68339-054	a	O X X X X X X X X X X X X X X X X X X X X X X X X X X X X X X O	0.80 µm Au min.	2-5 µm SnPb	1-3 µm SnPb	2-5 µm SnPb	13	to be ordered SEPARATELY	X: 77402-705 O: 77402-712	GREY	
	b	O X O X X X X X X X X X X X X X X X X X X X X X X X X X X X X O									
	c	O X X X X X X X X X X X X X X X X X X X X X X X X X X X X X X O									
68339-055	a	O X X X X X X X X X X X X X X X X X X X X X X X X X X X X X X O	0.80 µm Au min.	0.80 µm Au min.	gold flash	gold flash	20	to be ordered SEPARATELY	X: 77402-106 O: 77402-115	GREY	
	b	O X O X X X X X X X X X X X X X X X X X X X X X X X X X X X X O									
	c	O X X X X X X X X X X X X X X X X X X X X X X X X X X X X X X O									
68339-056	a	X X	1.25 µm Au min.	2-5 µm SnPb	1-3 µm SnPb	2-5 µm SnPb	13		X: 77402-705	GREY	
	b										
	c	X X									
68339-057	a	X X X X X X X X	1.25 µm Au min.	2-5 µm SnPb	1-3 µm SnPb	2-5 µm SnPb	13		X: 77402-705	GREY	
	b										
	c	X X X X X X X X									
68339-058	a	O O O O O O O O O O O O O O O O O O O O O O O O O O O O O O O O	0.80 µm Au min.	2-5 µm SnPb	1-3 µm SnPb	2-5 µm SnPb	13	to be ordered SEPARATELY	X: 77402-705 O: 77402-712	GREY	
	b	X X X X X X X X X X X X X X X X X X X X X X X X X X X X X X X X									
	c	O O O O O O O O O O O O O O O O O O O O O O O O O O O O O O O O									
68339-059	a	O X X X X O X X X X X X X X X X X X X X X X X X X X X X X X O X	2.00 µm Au min.	2.00 µm Au min.	gold flash	gold flash	13	to be ordered SEPARATELY	X: 77402-105 O: 77402-112	GREY	
	b	X X X X X X X X X X X X X X X X X X X X X X X X X X X X X X X X									
	c	X X X X X X X X X X X X X X X X X X X X X X X X X X X X X X O X									
68339-060	a										
	b										
	c										
68339-061	a	X X X X X X X X X X X X X X X X X X X X X X X X X X X X X X X X	0.40 µm Au min.	2-5 µm SnPb	1-3 µm SnPb	2-5 µm SnPb	13	to be ordered SEPARATELY	X: 77402-705	GREY	
	b	X X X X X X X X X X X X X X X X X X X X X X X X X X X X X X X X									
	c	X X X X X X X X X X X X X X X X X X X X X X X X X X X X X X X X									
68339-062	a	X X X X X X X X X X X X X X X X X X X X X X X X X X X X X X X X	0.40 µm Au min.	2-5 µm SnPb	1-3 µm SnPb	2-5 µm SnPb	13	to be ordered SEPARATELY	X: 77402-705	GREY	
	b	X X X X X X X X X X X X X X X X X X X X X X X X X X X X X X X X									
	c	X X X X X X X X X X X X X X X X X X X X X X X X X X X X X X X X									
68339-063	a	X X X X X X X X X X X X X X X X X X X X X X X X X X X X X X X X	0.40 µm Au min.	2-5 µm SnPb	1-3 µm SnPb	2-5 µm SnPb	13	to be ordered SEPARATELY	X: 77402-705	GREY	
	b	X X X X X X X X X X X X X X X X X X X X X X X X X X X X X X X X									
	c	X X X X X X X X X X X X X X X X X X X X X X X X X X X X X X X X									
68339-064	a	X X X X X X X X X X X X X X X X X X X X X X X X X X X X X X X X	0.40 µm Au min.	2-5 µm SnPb	1-3 µm SnPb	2-5 µm SnPb	13	to be ordered SEPARATELY	X: 77402-705	GREY	
	b	X X X X X X X X X X X X X X X X X X X X X X X X X X X X X X X X									
	c	X X X X X X X X X X X X X X X X X X X X X X X X X X X X X X X X									
68339-065	a	X X X X X X X X X X X X X X X X X X X X X X X X X X X X X X X X	0.40 µm Au min.	2-5 µm SnPb	1-3 µm SnPb	2-5 µm SnPb	13	to be ordered SEPARATELY	X: 77402-705	GREY	
	b	X X X X X X X X X X X X X X X X X X X X X X X X X X X X X X X X									
	c	X X X X X X X X X X X X X X X X X X X X X X X X X X X X X X X X									
68339-066	a	X X X X X X X X X X X X X X X X X X X X X X X X X X X X X X X X	0.40 µm Au min.	2-5 µm SnPb	1-3 µm SnPb	2-5 µm SnPb	13	to be ordered SEPARATELY	X: 77402-705	GREY	
	b	X X X X X X X X X X X X X X X X X X X X X X X X X X X X X X X X									
	c	X X X X X X X X X X X X X X X X X X X X X X X X X X X X X X X X									
68339-067	a	X X X X X X X X X X X X X X X X X X X X X X X X X X X X X X X X	0.40 µm Au min.	2-5 µm SnPb	1-3 µm SnPb	2-5 µm SnPb	13	to be ordered SEPARATELY	X: 77402-705	GREY	
	b	X X X X X X X X X X X X X X X X X X X X X X X X X X X X X X X X									
	c	X X X X X X X X X X X X X X X X X X X X X X X X X X X X X X X X									
68339-068	a	X X X X X X X X X X X X X X X X X X X X X X X X X X X X X X X X	0.40 µm Au min.	2-5 µm SnPb	1-3 µm SnPb	2-5 µm SnPb	13	to be ordered SEPARATELY	X: 77402-705	GREY	
	b	X X X X X X X X X X X X X X X X X X X X X X X X X X X X X X X X									
	c	X X X X X X X X X X X X X X X X X X X X X X X X X X X X X X X X									
68339-069	a	X X X X X X X X X X X X X X X X X X X X X X X X X X X X X X X X	0.40 µm Au min.	2-5 µm SnPb	1-3 µm SnPb	2-5 µm SnPb	13	to be ordered SEPARATELY	X: 77402-705	GREY	
	b	X X X X X X X X X X X X X X X X X X X X X X X X X X X X X X X X									
	c	X X X X X X X X X X X X X X X X X X X X X X X X X X X X X X X X									
68339-070	a	X X X X X X X X X X X X X X X X X X X X X X X X X X X X X X X X	0.40 µm Au min.	2-5 µm SnPb	1-3 µm SnPb	2-5 µm SnPb	13	to be ordered SEPARATELY	X: 77402-705	GREY	Locking frame 65188-001 is fitted
	b										
	c	X X X X X X X X X X X X X X X X X X X X X X X X X X X X X X X X									
68339-071	a	X X X X X X X X X X X X X X X X X X X X X X X X X X X X X X X X	0.40 µm Au min.	2-5 µm SnPb	1-3 µm SnPb	2-5 µm SnPb	13	to be ordered SEPARATELY	X: 77402-705	GREY	Locking frame 65188-001 is fitted
	b										
	c	X X X X X X X X X X X X X X X X X X X X X X X X X X X X X X X X									
68339-072	a	O X X X X X X X X X X X X X X X X X X X X X X X X X X X X X X O	0.80 µm Au min.	2-5 µm SnPb	1-3 µm SnPb	2-5 µm SnPb	13	to be ordered SEPARATELY	X: 77402-705 O: 77402-712	GREY	
	b	X X X X X X X X X X X X X X X X X X X X X X X X X X X X X X X X									
	c	X X X X X X X X X X X X X X X X X X X X X X X X X X X X X X X X									
68339-073	a	O O X X X O X X X X X X X X X X X X X X X X X X X X X X X X O O	1.25 µm Au min.	1.25 µm Au min.	gold flash	gold flash	20	to be ordered SEPARATELY	X: 77402-106 O: 77402-115	GREY	
	b	O O X X X X X X X X X X X X X X X X X X X X X X X X X X X X O O									
	c	O O X X X X X X X X X X X X X X X X X X X X X X X X X X X X O O									
68339-074	a	O O X X X X X X X X X X X X X X X X X X X X X X X X X X X X O O	1.25 µm Au min.	1.25 µm Au min.	gold flash	gold flash	20	to be ordered SEPARATELY	X: 77402-106 O: 77402-115	GREY	
	b	O O X X X X X X X X X X X X X X X X X X X X X X X X X X X X O O									
	c	O O X X X X X X X X X X X X X X X X X X X X X X X X X X X X O O									
68339-075	a	X X X X X X X X X X X X X X X X X X X X X X X X X X X X X X X X	0.40 µm Au min.	2-5 µm SnPb	1-3 µm SnPb	2-5 µm SnPb	13	to be ordered SEPARATELY	X: 77402-705	GREY	
	b	X X X X X X X X X X X X X X X X X X X X X X X X X X X X X X X X									
	c	X X X X X X X X X X X X X X X X X X X X X X X X X X X X X X X X									

mat'l code: SEE TABLE	tolerances unless otherwise specified	CUSTOMER COPY	FCI ELECTRONICS www.fciconnect.com
LTr / ECR nr / CP / date: N H40488 008 94.07.17; P F90385 LMV 99.07.12	linear	projection	title: P.L.P.F MALE CONNECTOR
	angles	mm	product family: BACK PANEL; code: 213
	dr: M.VISSCHERS 81.05.04; dwg: NOTTEAU.JF 99.07.12; chk: D. MATHEVON 99.07.12; appr: J.N. 99.07.12	scale: 1:1	size: A1; dwg nr: 68339; sheet: 5 of -
sheet / revision / index / sheet			

| PRODUCT NO | PIN "O" AND "X" PLACED IN POSITION | | |

PRODUCT NO	ROW	PIN "O" AND "X" PLACED IN POSITION 1	2	3	4	5	6	7	8	9	10	11	12	13	14	15	16	17	18	19	20	21	22	23	24	25	26	27	28	29	30	31	32	PLATING THICKNESS CONTACT AREA F	CONTACT AREA G	PRESS FIT AREA V	TRANSITION AREA Z	PIN LENGTH DIM L	CODING PART	PRODUCT NR REPAIR PINS	COLOUR BODY	REMARKS
68339-101	a	O	X	X	X	X	X	X	X	X	X	X	X	O	O	O	O	X	X	X	X	X	X	X	X	X	X	X	X	X	X	X	X	0.80 µm Au min.	0.80 µm Au min.	gold flash	gold flash	13	to be ordered SEPARATELY	X: 77402-105 O: 77402-112	GREY	
	b	X	X	X	X	X	X	X	X	X	X	X	X	X	X	X	O	X	X	X	X	X	X	X	X	X	X	X	X	X	X	X	X									
	c	X	X	X	X	X	X	X	X	X	X	X	X	X	X	X	X	X	X	X	X	X	X	X	X	X	X	X	X	X	X	X	X									
68339-102	a	O	X	X	X	X	X	X	X	X	X	X	X	X	X	X	X	X	X	X	X	X	X	X	X	X	X	X	X	X	X	X	X	0.80 µm Au min.	0.80 µm Au min.	gold flash	gold flash	13	to be ordered SEPARATELY	X: 77402-105 O: 77402-112	GREY	
	b																																									
	c	X	X	X	X	X	X	X	X	X	X	X	X	X	X	X	X	X	X	X	X	X	X	X	X	X	X	X	X	X	X	X	O									
68339-103	a	O	X	X	X	X	X	X	X	O	X	X	X	X	X	X	X	X	X	X	X	X	X	X	X	X	X	X	X	X	X	X	X	0.80 µm Au min.	0.80 µm Au min.	gold flash	gold flash	13	to be ordered SEPARATELY	X: 77402-105 O: 77402-112	GREY	
	b																																									
	c	X	X	O	X	X	X	X	X	O	X	X	X	X	X	X	X	X	X	X	X	X	X	X	X	X	X	X	X	X	X	X	O									
68339-104	a	O	X	X	X	X	X	X	X	X	X	X	X	X	X	X	X	X	X	X	X	X	X	X	X	X	X	X	X	X	X	X	X	0.80 µm Au min.	0.80 µm Au min.	gold flash	gold flash	13	to be ordered SEPARATELY	X: 77402-105 O: 77402-112	GREY	
	b									X	X	X	X	X	X	X	X	X	X	X	X	X	X	X	X	X	X	X	X	X	X	O	O									
	c	X	X	X	X	X	X	X	X	X	X	X	X	X	X	X	X	X	X	X	X	X	X	X	X	X	X	X	X	X	X	X	X									
68339-105	a	O	X	X	X	X	X	X	X	O	X	X	X	X	X	X	X	X	X	X	X	X	X	X	X	X	X	X	X	X	X	X	X	0.80 µm Au min.	0.80 µm Au min.	gold flash	gold flash	13	to be ordered SEPARATELY	X: 77402-105 O: 77402-112	GREY	
	b									X	X	X	X	X	X	X	X	X	X	X	X	X	X	X	X	X	X	X	X	X	X	O	O									
	c	X	X	X	X	X	X	X	O	X	X	X	X	X	X	X	X	X	X	X	X	X	X	X	X	X	X	X	X	X	X	X	X									
68339-106	a	X	X	X	X	X	X	X	X	X	X	X	X	X	X	X	X	X	X	X	X	X	X	X	X	X	X	X	X	X	X	X	X	0.80 µm Au min.	0.80 µm Au min.	gold flash	gold flash	13	to be ordered SEPARATELY	X: 77402-105 O: 77402-112	GREY	
	b	X	X	X	X	X	X	X	X	X	X	X	X	X	X	X	X	O																								
	c	X	X	X	X	X	X	X	X	X	X	X	X	X	X	X	X	X	X	X	X	X	X	X	X	X	X	X	X	X	X	X	O									
68339-107	a	X	X	X	X	X	X	X	X	X	X	X	X	X	X	X	X	X	X	X	X	X	X	X	X	X	X	X	X	O	O	O	O	0.80 µm Au min.	2-5 µm SnPb	1-3 µm SnPb	2-5 µm SnPb	6	to be ordered SEPARATELY	X: 77402-701 O: 77402-711	GREY	
	b																																									
	c	X	X	X	X	X	X	X	X	X	X	X	X	X	X	X	X	X	X	X	X	X	X	X	X	X	X	X	X	O	O	O	O									
68339-108	a	X	X	X	X	X	X	X	X	X	X	X	X	X	X	X	X	X	X	X	X	X	X	X	X	X	X	X	X	O	O	O	O	2.00 µm Au min.	2.00 µm Au min.	gold flash	gold flash	13	to be ordered SEPARATELY	X: 77402-105 O: 77402-112	GREY	
	b																																									
	c	X	X	X	X	X	X	X	X	X	X	X	X	X	X	X	X	X	X	X	X	X	X	X	X	X	X	X	X	O	O	O	O									
68339-109	a	X	X	X	X	X	X	X	X	X	X	X	X	X	X																			0.40 µm Au min.	2-5 µm SnPb	1-3 µm SnPb	2-5 µm SnPb	6	to be ordered SEPARATELY	X: 77402-701 O: 77402-711	GREY	
	b	X	X	X	X	X	X	X	X	X	X	X	X	X	X																											
	c	X	X	X	X	X	X	X	X	X	X	X	X	X	X																											
68339-110	a		X				X					X			X					X			X					X			X			1.25 µm Au min.	2-5 µm SnPb	1-3 µm SnPb	2-5 µm SnPb	13	to be ordered SEPARATELY	X: 77402-705	GREY	
	b																																									
	c			X	X	X		X					X		X		X				X		X		X				X		X		X									
68339-111	a	X	X	X	X	X	X	X	X	X	X	X	X	X	X	X	X	X	X	X	X	X	X	X	X	X	X	X	X	X	X	X	O	0.80 µm Au min.	2-5 µm SnPb	1-3 µm SnPb	2-5 µm SnPb	6	to be ordered SEPARATELY	X: 77402-701 O: 77402-711	GREY	
	b	X	X	X	X	X	X	X	X	O	X	X	X	X	X	X	X	X	X	X	X	X	X	X	X	X	X	X	X	X	X	X	O									
	c	X	X	X	X	X	X	X	X	O	X	X	X	X	X	X	X	X	X	X	X	X	X	X	X	X	X	X	X	X	X	X	O									
68339-112	a	X	X	X	X	X	X	X	X	O	X	X	X	X	X	X	X	X	X	X	X	X	X	X	X	X	X	X	X	X	X	X	X	0.80 µm Au min.	2-5 µm SnPb	1-3 µm SnPb	2-5 µm SnPb	6	to be ordered SEPARATELY	X: 77402-701 O: 77402-711	GREY	
	b	X	X	X	X	X	X	X	X	O	X	X	X	X	X	X	X	X	X	X	X	X	X	X	X	X	X	X	X	X	X	X	O									
	c	X	X	X	X	X	X	X	X	O	X	X	X	X	X	X	X	X	X	X	X	X	X	X	X	X	X	X	X	X	X	X	X									
68339-113	a	X	X	X	X	X	X	X	X	X	X	X	X	X	X	X	X	X	X	X	X	X	X	X	X	X	X	X	X	X	X	X	O	2.00 µm Au min.	2.00 µm Au min.	gold flash	gold flash	13	to be ordered SEPARATELY	X: 77402-105 O: 77402-112	GREY	
	b	X	X	X	X	X	X	X	X	X	X	X	X	X	X	X	X	X	X	X	X	X	X	X	X	X	X	X	X	X	X	X	O									
	c	X	X	X	X	X	X	X	X	X	X	X	X	X	X	X	X	X	X	X	X	X	X	X	X	X	X	X	X	X	X	X	O									
68339-114	a	X	X	X	X	X	X	X	X	X	X	X	X	X	X	X	X	X	X	X	X	X	X	X	X	X	X	X	X	X	X	X	X	2.00 µm Au min.	2.00 µm Au min.	gold flash	gold flash	20	to be ordered SEPARATELY	X: 77402-106 O: 77402-115	GREY	
	b	X	X	X	X	X	X	X	X	X	X	X	X	X	X	X	X	X	X	X	X	X	X	X	X	X	X	X	X	X	X	X	X									
	c	X	X	X	X	X	X	X	X	X	X	X	X	O	O	O	O	O	O	O	O	O	O	X	X	X	X	X	X	X	X	X	X									
68339-115	a	X	X	X	X	X	X	X	X	X	X	X	X	X	X	X	X	X	X	X	X	X	X	X	X	X	X	X	X	X	X	X	X	1.25 µm Au min.	1.25 µm Au min.	gold flash	gold flash	13	to be ordered SEPARATELY	X: 77402-105	GREY	
	b	X	X	X	X	X	X	X	X	X	X	X	X	X	X	X	X	X	X	X	X	X	X	X	X	X	X	X	X	X	X	X	X									
	c																																									
68339-116	a	O	X	X	X	X	X	X	X	X	X	X	X	X	X	X	X	X	X	X	X	X	X	X	X	X	X	X	X	X	X	X	O	0.80 µm Au min.	0.80 µm Au min.	gold flash	gold flash	13	to be ordered SEPARATELY	X: 77402-105 O: 77402-112	GREY	
	b	X	X	X	X	X	X	X	X	X	X	X	X	X	X	X	X	X	X	X	X	X	X	X	X	X	X	X	X	X	X	X	X									
	c	X	X	X	X	X	X	X	X	X	X	X	X	X	X	X	X	X	X	X	X	X	X	X	X	X	X	X	X	X	X	X	X									
68339-117	a	O	O	O	O	O	O	O	X	X	X	X	X	X	X	X	X	X	X	X	X	X	X	X	X	X	X	X	X	X	X	X	X	2.00 µm Au min.	gold flash	gold flash	gold flash	6	to be ordered SEPARATELY	X: 77402-101 O: 77402-111	GREY	
	b	O	O	O	O	O	O	O	X	X	X	X	X	X	X	X	X	X	X	X	X	X	X	X	X	X	X	X	X	X	X	X	X									
	c	O	O	O	O	O	O	O	X	X	X	X	X	X	X	X	X	X	X	X	X	X	X	X	X	X	X	X	X	X	X	X	X									
68339-118	a	X	X	X	X	X	X	X	X	X	X	X	X	X	X	X	X	X	X	X	X	X	X	X	X	X	X	X	X	X	X	X	O	0.80 µm Au min.	0.80 µm Au min.	gold flash	gold flash	ROW a=6 b+c=13	to be ordered SEPARATELY	X: 77402-101 X: 77402-105 O: 77402-112	GREY	pin length F.M.L.B = 13
	b	X	X	X	X	X	X	X	X	X	X	X	X	X	X	X	X	X	X	X	X	X	X	X	X	X	X	X	X	X	X	X	O									
	c	X	X	X	X	X	X	X	X	X	X	X	X	X	X	X	X	X	X	X	X	X	X	X	X	X	X	X	X	X	X	X	O									
68339-119	a	X	X	X	X	X	X	X	X	X	X	X	X	X	X	X	X	X	X	X	X	X	X	X	X	X	X	X	X	X	X	O	O	0.80 µm Au min.	0.80 µm Au min.	gold flash	gold flash	13	to be ordered SEPARATELY	X: 77402-105 O: 77402-112	GREY	
	b	X	X	X	X	X	X	X	X	X	X	X	X	X	X	X	X	X	X	X	X	X	X	X	X	X	X	X	X	X	X	O	O									
	c	X	X	X	X	X	X	X	X	X	X	X	X	X	X	X	X	X	X	X	X	X	X	X	X	X	X	X	X	X	X	O	O									
68339-120	a	O	O	O	O	X	X	X	X	X	X	X	X	X	X	X	X	X	X	X	X	X	X	X	X	X	X	X	X	X	X	X	X	0.80 µm Au min.	2-5 µm SnPb	1-3 µm SnPb	2-5 µm SnPb	6	to be ordered SEPARATELY	X: 77402-701 O: 77402-711	GREY	
	b	O	O	O	O	X	X	X	X	X	X	X	X	X	X	X	X	X	X	X	X	X	X	X	X	X	X	X	X	X	X	X	X									
	c	O	O	O	O	X	X	X	X	X	X	X	X	X	X	X	X	X	X	X	X	X	X	X	X	X	X	X	X	X	X	X	X									
68339-121	a	O	O	O	O	O	X	X	X	X	X	X	X	X	X	X	X	X	X	X	X	X	X	X	X	X	X	X	X	X	X	X	X	0.80 µm Au min.	2-5 µm SnPb	1-3 µm SnPb	2-5 µm SnPb	6	to be ordered SEPARATELY	X: 77402-701 O: 77402-711	GREY	
	b																																									
	c	O	O	O	O	X	X	X	X	X	X	X	X	X	X	X	X	X	X	X	X	X	X	X	X	X	X	X	X	X	X	X	X									
68339-122	a	O	O	O	O	O	X	X	X	X	X	X	X	X	X	X	X	X	X	X	X	X	X	X	X	X	X	X	X	X	X	X	X	0.80 µm Au min.	2-5 µm SnPb	1-3 µm SnPb	2-5 µm SnPb	6	to be ordered SEPARATELY	X: 77402-701 O: 77402-711	GREY	
	b	O	O	O	O	O	O	O	O	O	O	O	O	O	O	O	O	O	O	O	O	O	O	O	O	O	O	O	O	O	O	O	O									
	c	O	O	O	O	X	X	X	X	X	X	X	X	X	X	X	X	X	X	X	X	X	X	X	X	X	X	X	X	X	X	X	X									
68339-123	a	X	X	X	X	X	X	X	X	X	X	X	X	X	X	X	X	X	X	X	X	X	X	X	X	X	X	X	X	X	X	X	X	0.40 µm Au min.	2-5 µm SnPb	1-3 µm SnPb	2-5 µm SnPb	6	to be ordered SEPARATELY	X: 77402-701	GREY	
	b	X	X	X	X	X	X	X	X	X	X	X	X	X	X	X	X	X	X	X	X	X	X	X	X	X	X	X	X	X	X	X	X									
	c																																									
68339-124	a																																									
	b																																									
	c																																									
68339-125	a	X	X	X	X	X	X	X	X	X	X	X	X	X	X	X	X	X	X	X	X	X	X	X	X	X	X	X	X	X	X	X	X	0.80 µm Au min.	2-5 µm SnPb	1-3 µm SnPb	2-5 µm SnPb	20	to be ordered SEPARATELY	X: 77402-706 O: 77402-715	GREY	
	b																																									
	c	X	X	X	O	X	X	O	X	X	X	X	X	X	X	X	X	X	X	X	X	X	X	X	X	X	X	X	X	X	X	X	X									

mat'l code	SEE TABLE	
UT	ECN no	dr	date
L	H40488	DOB	94.07.17
M	F60385	LMU	99.07.12
tolerances unless otherwise specified		
linear		
angles		
dr	N.VISSCHERS	91.09.06
engr	NOTTEAU,JF	99.07.12
STP	J. MATHEVON	99.07.12
appd	JF.N	99.07.12
CUSTOMER COPY		
projection		
mm		
scale	1:1	
FCI ELECTRONICS www.fciconnect.com		
title	P.L.P.F MALE CONNECTOR	
product family	BACK PANEL	code 213
size	A1	dwg no 68339
sheet	7 of -	
sheet	revision	
copy	sheet	

PRODUCT NO	ROW	PIN "O" AND "X" PLACED IN POSITION 1	2	3	4	5	6	7	8	9	10	11	12	13	14	15	16	17	18	19	20	21	22	23	24	25	26	27	28	29	30	31	32	PLATING THICKNESS CONTACT AREA F	CONTACT AREA G	PRESS FIT AREA V	TRANSITION AREA Z	PIN LENGTH DIM L	CODING PART	PRODUCT NR REPAIR PINS	COLOUR BODY	REMARKS
68339-126	a		X		X		X		X		X		X		X		X		X		X		X		X		X		X		X		X	0.80 µm Au min.	2-5 µm SnPb	1-3 µm SnPb	2-5 µm SnPb	20	to be ordered SEPARATELY	X: 77402-706 O: 77402-715	GREY	
	b																																									
	c		X		O		X		O		X		X		X		X		X		X		X		X		X		X		X		X									
68339-127	a	X	X	X	X	X	X	X	X	X	X	X	X	X	X	X	X	X	X	X	X	X	X	X	X	X	X	X	X	O	O	O	O	0.80 µm Au min.	2-5 µm SnPb	1-3 µm SnPb	2-5 µm SnPb	6	to be ordered SEPARATELY	X: 77402-701 O: 77402-711	GREY	
	b	O	O	O	O	O	O	O	O	O	O	O	O	O	O	O	O	O	O	O	O	O	O	O	O	O	O	O	O	O	O	O	O									
	c	X	X	X	X	X	X	X	X	X	X	X	X	X	X	X	X	X	X	X	X	X	X	X	X	X	X	X	X	O	O	O	O									
68339-128	a	O	X	X	X	X	X	X	X	X	X	X	X	X	X	X	X	X	X	X	X	X	X	X	X	X	X	X	X	X	X	X	O	1.25 µm Au min.	2-5 µm SnPb	1-3 µm SnPb	2-5 µm SnPb	6	to be ordered SEPARATELY	X: 77402-701 O: 77402-711	GREY	
	b	O	X	X	X	X	X	X	X	X	X	X	X	X	X	X	X	X	X	X	X	X	X	X	X	X	X	X	X	X	X	X	O									
	c	O	X	X	X	X	X	X	X	X	X	X	X	X	X	X	X	X	X	X	X	X	X	X	X	X	X	X	X	X	X	X	O									
68339-129	a	O	X	X	X	X	X	X	X	X	X	X	X	X	X	X	X	X	X	X	X	X	X	X	X	X	X	X	X	X	X	X	O	1.25 µm Au min.	1.25 µm Au min.	gold flash	gold flash	13	to be ordered SEPARATELY	X: 77402-105 O: 77402-112	GREY	
	b	O	X	X	X	X	X	X	X	X	X	X	X	X	X	X	X	X	X	X	X	X	X	X	X	X	X	X	X	X	X	X	O									
	c	O	X	X	X	X	X	X	X	X	X	X	X	X	X	X	X	X	X	X	X	X	X	X	X	X	X	X	X	X	X	X	O									
68339-130	a	O	X	X	X	X	X	X	X	X	X	X	X	X	X	X	X	X	X	X	X	X	X	X	X	X	X	X	X	X	X	X	O	0.80 µm Au min.	0.80 µm Au min.	gold flash	gold flash	13	to be ordered SEPARATELY	X: 77402-105 O: 77402-112	GREY	
	b	O	X	X	X	X	X	X	X	X	X	X	X	X	X	X	X	X	X	X	X	X	X	X	X	X	X	X	X	X	X	X	O									
	c	O	X	X	X	X	X	X	X	X	X	X	X	X	X	X	X	X	X	X	X	X	X	X	X	X	X	X	X	X	X	X	O									
68339-131	a	X	X	X	X	X	X	X	X	X	X	X	X		X		X	X	X	X	X	X	X	X	X	X	X	X	X	X	X	X	X	0.40 µm Au min.	0.40 µm Au min.	gold flash	gold flash	13	to be ordered SEPARATELY	X: 77402-105	GREY	
	b	X	X	X	X	X	X	X	X	X	X	X	X		X				X		X						X						X									
	c	X	X	X	X	X	X	X	X	X	X	X	X		X		X	X	X	X	X	X	X	X	X	X	X	X	X	X	X	X	X									
68339-132	a		O		X		X		X		X		X		X		X		X		X		X		X		X		X		X		O	0.80 µm Au min.	0.80 µm Au min.	gold flash	gold flash	13	to be ordered SEPARATELY	X: 77402-105 O: 77402-112	GREY	
	b																																									
	c		O		X		X		X		X		X		X		X		X		X		X		X		X		X		X		O									
68339-133	a	X	X	X	X	X	X	X	X	X	X	X	X	X	X	X	X	X	X	X	X	X	X	X	X	X	X	X	X	O	O	O	O	0.80 µm Au min.	gold flash	gold flash	gold flash	6	to be ordered SEPARATELY	X: 77402-101 O: 77402-111	GREY	
	b	X	X	X	X	X	X	X	X	X	X	X	X	X	X	X	X	X	X	X	X	X	X	X	X	X	X	X	X	X	X	X	X									
	c	X	X	X	X	X	X	X	X	X	X	X	X	X	X	X	X	X	X	X	X	X	X	X	X	X	X	X	X	X	X	X	X									
68339-134	a	X	X	X	X	X	X	X	X	X	X	X	X	X	X	X	X	X	X	X	X	X	X	X	X	X	X	X	X	X	X	X	X	1.25 µm Au min.	1.25 µm Au min.	gold flash	gold flash	20	to be ordered SEPARATELY	X: 77402-106 O: 77402-115	GREY	
	b	X	X	X	X	X	X	X	X	X	X	X	X	X	X	X	X	X	X	X	X	X	X	X	X	X	X	X	X	X	X	X	X									
	c	X	X	X	X	X	X	X	X	X	X	X	O	O	O	O	O	O	O	O	O	X	X	X	X	X	X	X	X	X	X	X	X									
68339-135	a	O	X	X	X	X	X	X	X	X	X	X	X	X	X	X	X	X	X	X	X	X	X	X	X	X	X	X	X	X	X	X	O	0.80 µm Au min.	0.80 µm Au min.	gold flash	gold flash	19	to be ordered SEPARATELY	X: 77402-104 O: 77402-113	GREY	NOT TOOLED
	b																																									
	c	X	X	X	X	X	X	X	X	X	X	X	X	X	X	X	X	X	X	X	X	X	X	X	X	X	X	X	X	X	X	X	X									
68339-136	a	O	X	X	X	X	X	X	X	X	X	X	X	X	X	X	X	X	X	X	X	X	X	X	X	X	X	X	X	X	X	X	O	0.80 µm Au min.	2-5 µm SnPb	1-3 µm SnPb	2-5 µm SnPb	13	to be ordered SEPARATELY	X: 77402-705 O: 77402-712	GREY	
	b																																									
	c	X	X	X	X	X	X	X	X	X	X	X	X	X	X	X	X	X	X	X	X	X	X	X	X	X	X	X	X	X	X	X	X									
68339-137	a	O	O	X	X	X	X	X	X	X	X	X	X	X	X	X	X	X	X	X	X	X	X	X	X	X	X	X	X	X	X	O	O	1.25 µm Au min.	1.25 µm Au min.	gold flash	gold flash	13	to be ordered SEPARATELY	X: 77402-105 O: 77402-112	GREY	
	b	O	O	X	X	X	X	X	X	X	X	X	X	X	X	X	X	X	X	X	X	X	X	X	X	X	X	X	X	X	X	O	O									
	c	O	O	X	X	X	X	X	X	X	X	X	X	X	X	X	X	X	X	X	X	X	X	X	X	X	X	X	X	X	X	O	O									
68339-138	a	X	X	X	X	X	X	X	X	X	X	X	X	X	X	X	X	X	X	X	X	X	X	X	X	X	X	X	X	O	O	X	X	0.40 µm Au min.	2-5 µm SnPb	1-3 µm SnPb	2-5 µm SnPb	6	to be ordered SEPARATELY	X: 77402-701 O: 77402-711	GREY	
	b	X	X	X	X	X	X	X	X	X	X	X	X	X	X	X	X	X	X	X	X	X	X	X	X	X	X	X	X	O	O	X	X									
	c	X	X	X	X	X	X	X	X	X	X	X	X	X	X	X	X	X	X	X	X	X	X	X	X	X	X	X	X	X	X	X	X									
68339-139	a	O	X	X	X	X	X	X	X	X	X	X	X	X	X	X	X	X	X	X	X	X	X	X	X	X	X	X	X	X	X	X	O	0.80 µm Au min.	2-5 µm SnPb	1-3 µm SnPb	2-5 µm SnPb	13	to be ordered SEPARATELY	X: 77402-705 O: 77402-712	GREY	
	b	O	X	X	X	X	X	X	X	X	X	X	X	X	X	X	X	X	X	X	X	X	X	X	X	X	X	X	X	X	X	X	O									
	c	O	X	X	X	X	X	X	X	X	X	X	X	X	X	X	X	X	X	X	X	X	X	X	X	X	X	X	X	X	X	X	O									
68339-140	a	X		X		X		X		X		X		X		X		X		X		X		X		X		X		X		X		0.80 µm Au min.	2-5 µm SnPb	1-3 µm SnPb	2-5 µm SnPb	6	to be ordered SEPARATELY	X: 77402-701	GREY	
	b																																									
	c	X		X		X		X		X		X		X		X		X		X		X		X		X		X		X		X									
68339-141	a	X	X	X	X	X	X	X	X	X	X	X	X	X	X	X	X	X	X	X	X	X	X	X	X	X	X	X	X	X	X	X	X	0.40 µm Au min.	2-5 µm SnPb	1-3 µm SnPb	2-5 µm SnPb	6	to be ordered SEPARATELY	X: 77402-701	GREY	Latch frame 65188-001 is fitted
	b																																									
	c	X	X	X	X	X	X	X	X	X	X	X	X	X	X	X	X	X	X	X	X	X	X	X	X	X	X	X	X	X	X	X	X									
68339-142	a	O	O	X	X	X	X	X	X	X	X	X	X	X	X	X	X	X	X	X	X	X	X	X	X	X	X	X	X	X	X	O	O	0.80 µm Au min.	2-5 µm SnPb	1-3 µm SnPb	2-5 µm SnPb	13	to be ordered SEPARATELY	X: 77402-705 O: 77402-712	GREY	
	b	O	O	X	X	X	X	X	X	X	X	X	X	X	X	X	X	X	X	X	X	X	X	X	X	X	X	X	X	X	X	O	O									
	c	O	O	X	X	X	X	X	X	X	X	X	X	X	X	X	X	X	X	X	X	X	X	X	X	X	X	X	X	X	X	O	O									
68339-143	a	X	X	X	X	X	X	X	X	X	X	X	X	X	X	X	X	X	X	X	X	X	X	X	X	X	X	X	X	X	X	X	X	0.40 µm Au min.	2-5 µm SnPb	1-3 µm SnPb	2-5 µm SnPb	13	to be ordered SEPARATELY	X: 77402-705	GREY	
	b	X	X		X	X	X	X	X	X	X	X	X	X	X	X	X	X	X	X	X	X	X	X	X	X	X	X	X		X	X	X									
	c	X	X		X	X	X	X	X	X	X	X	X	X	X	X	X	X	X	X	X	X	X	X	X	X	X	X	X		X	X	X									
68339-144	a	O	O	X	X	X	X	X	X	X	X	X	X	X	X	X	X	X	X	X	X	X	X	X	X	X	X	X	X	O	O	O	O	0.40 µm Au min.	2-5 µm SnPb	1-3 µm SnPb	2-5 µm SnPb	6	to be ordered SEPARATELY	X: 77402-701 O: 77402-711	GREY	
	b																																									
	c	O	O	O	O	X	X	X	X	X	X	X	X	X	X	X	X	X	X	X	X	X	X	X	X	X	X	X	X	O	O	O	O									
68339-145	a	O	O	X	X	X	X	X	X	X	X	X	X	X	X	X	X	X	X	X	X	X	X	X	X	X	X	X	X	O	O	O	O	0.40 µm Au min.	0.40 µm Au min.	gold flash	gold flash	13	to be ordered SEPARATELY	X: 77402-105 O: 77402-112	GREY	
	b																																									
	c	O	O	O	O	X	X	X	X	X	X	X	X	X	X	X	X	X	X	X	X	X	X	X	X	X	X	X	X	O	O	O	O									
68339-146	a	O	X	X	X	X	X	X	X	X	X	X	X	X	X	X	X	X	X	X	X	X	X	X	X	X	X	X	X	X	X	X	O	0.40 µm Au min.	2-5 µm SnPb	1-3 µm SnPb	2-5 µm SnPb	6	to be ordered SEPARATELY	X: 77402-701 O: 77402-711	GREY	
	b																																									
	c	O	X	X	X	X	X	X	X	X	X	X	X	X	X	X	X	X	X	X	X	X	X	X	X	X	X	X	X	X	X	X	O									
68339-147	a	O	O	O	O	O	O	O	O	O	X	X	X	X	X	X	X	X	X	X	X	X	X	X	X	X	X	X	X	X	X	X	X	0.80 µm Au min.	0.80 µm Au min.	gold flash	gold flash	13	to be ordered SEPARATELY	X: 77402-105 O: 77402-112	GREY	
	b																																									
	c	O	O	O	O	O	O	O	O	O	X	X	X	X	X	X	X	X	X	X	X	X	X	X	X	X	X	X	X	X	X	X	X									
68339-148	a		X		X		X		X		X		X		X		X		X		X		X		X		X		X		X		X	0.40 µm Au min.	2-5 µm SnPb	1-3 µm SnPb	2-5 µm SnPb	6	to be ordered SEPARATELY	X: 77402-701	GREY	
	b		X		X		X		X		X		X		X		X		X		X		X		X		X		X		X		X									
	c		X		X		X		X		X		X		X		X		X		X		X		X		X		X		X		X									
68339-149	a		O		X		X		X		X		X		X		X		X		X		X		X		X		X		O		X	0.40 µm Au min.	2-5 µm SnPb	1-3 µm SnPb	2-5 µm SnPb	6	to be ordered SEPARATELY	X: 77402-701 O: 77402-711	GREY	
	b		X		X		X		X		X		X		X		X		X		X		X		X		X		X		X		X									
	c		O		X		X		X		X		X		X		X		X		X		X		X		X		X		O		X									
68339-150	a																																									
	b																																									
	c																																									

mat'l code SEE TABLE				tolerances unless otherwise specified		CUSTOMER COPY	FCI ELECTRONICS www.fciconnect.com
dr	dch no	dr	date	linear			
L	H40488	008	94.07.17			projection	title P.L.P.F
M	F80385	UKV	99.07.12	angles			MALE CONNECTOR
				dr M.VISSCHERS 81.06.06		mm	product family BACK PANEL code 213
				eng/ NOTTEAU JF 99.07.12			size Dwg no A1 68339 sheet 8 of –
				ctr D. MATHEVON 99.07.12		scale 1:1	
				appd JF.N 99.07.12			
sheet	revision						
notes	sheet						

DUCT NO	ROW	PIN "O" AND "X" PLACED IN POSITION (1 2 3 4 5 6 7 8 9 10 11 12 13 14 15 16 17 18 19 20 21 22 23 24 25 26 27 28 29 30 31 32)	PLATING THICKNESS: CONTACT AREA F	CONTACT AREA G	PRESS FIT AREA V	TRANSITION AREA Z	PIN LENGTH DIM L	CODING PART	PRODUCT NR REPAIR PINS	COLOUR BODY	REMARKS
339-151	a	O X X X X X X X X X X X X X X X X X X X X X X X X X X X X X X X X	0.80 µm Au min.	2-5 µm SnPb	1-3 µm SnPb	2-5 µm SnPb	13	to be ordered SEPARATELY	X: 77402-705 O: 77402-712	GREY	
	b	O X X X X X X X X X X X X X X X X X X X X X X X X X X X X X X X X									
	c	O X X X X X X X X X X X X X X X X X X X X X X X X X X X X X X X X									
339-152	a										
	b										
	c										
339-153	a	X X X X X X X X X X X X X X X X X X X X X X X X X X X X X X X X X	0.80 µm Au min.	N/A	1-3 µm SnPb	2-5 µm SnPb	6	to be ordered SEPARATELY	X: 77402-701 O: 77402-711	GREY	
	b	O O O O O O O O O O O O O O O O O O O O O O O O O O O O O O O O O									
	c	X X X X X X X X X X X X X X X X X X X X X X X X X X X X X X X X X									
339-154	a	X X X X X X X X X X X X X X X X X X X X X X X X X X X X X X X X X	2.00 µm Au min.	2.00 µm Au min.	gold flash	gold flash	13	to be ordered SEPARATELY	X: 77402-105 O: 77402-112	GREY	
	b	X X X X X X X X X X X X X X X X X X X X X X X X X X X X X X X X X									
	c	X X X X X X X X X X X X X X X X X X X X X X X X X X X X X X X X X									
339-155	a	X X X X X X X X X X X X X X X X X X X X X X X X X X X X X X X X X	2.00 µm Au min.	N/A	gold flash	gold flash	6	to be ordered SEPARATELY	X: 77402-701 O: 77402-711	GREY	
	b	X X X X X X X X X X X X X X X X X X X X X X X X X X X X X X X X X									
	c	X X X X X X X X X X X X X X X X X X X X X X X X X X X X X X X X X									
339-156	a	X X X X X X X X X X O O O O O X X X X X X X X X X X X X X X X X	0.40 µm Au min.	N/A	2-4 µm Ni	2-4 µm Ni	6	to be ordered SEPARATELY	X: 77402-701 O: 77402-711	GREY	
	b	X X X X X X X X X X O O O O O X X X X X X X X X X X X X X X X X									
	c	X X X X X X X X X X O O O O O X X X X X X X X X X X X X X X X X									
339-157	a	X X X X X X X X X X X X X X X X X X X X X X X X X X X X X X X X X	0.40 µm Au min.	0.40 µm Au min.	gold flash	gold flash	13	to be ordered SEPARATELY	X: 77402-105	GREY	
	b	X X X X X X X X X X X X X X X X X X X X X X X X X X X X X X X X X									
	c	X X X X X X X X X X X X X X X X X X X X X X X X X X X X X X X X X									
339-158	a	X X X X X X X X X X O O O O O	0.40 µm Au min.	N/A	2-4 µm Ni	2-4 µm Ni	6	to be ordered SEPARATELY	X: 77402-701 O: 77402-711	GREY	
	b	X X X X X X X X X X O O O O O									
	c	X X X X X X X X X X O O O O O									
339-159	a	O X X X X X X X X X X X X X X X X X X X X X X X X X X X X X X X O	0.80 µm Au min.	N/A	1-3 µm SnPb	2-5 µm SnPb	6	to be ordered SEPARATELY	X: 77402-701 O: 77402-711	GREY	
	b										
	c	O X X X X X X X X X X X X X X X X X X X X X X X X X X X X X X X O									
339-160	a	X X X X X X X X X X X X X X X X X X X X X X X X X O X X X X X X	0.80 µm Au min.	N/A	1-3 µm SnPb	2-5 µm SnPb	6	to be ordered SEPARATELY	X: 77402-701 O: 77402-711	GREY	
	b	X X X X X X X X X X X X X X X X X X X X X X X X X O X X X X X X									
	c	X X X X X X X X X X X X X X X X X X X X X X X X X O X O X X O X X O									
339-161	a	O X X X X X X X X X X X X X X X X X X X X X X X X X X X X O X X	0.40 µm Au min.	N/A	1-3 µm SnPb	2-5 µm SnPb	6	to be ordered SEPARATELY	X: 77402-701 O: 77402-711	GREY	
	b	X X X X X X X X X X X X X X X X X X X X X X X X X X X X X X X X X									
	c	O X X X X X X X X X X X X X X X X X X X X X X X X X X X X X X X X									
339-162	a	X O X X X X X X X X X X X X X X X X X X X X X X X X X X X X O X X	0.40 µm Au min.	N/A	1-3 µm SnPb	2-5 µm SnPb	6	to be ordered SEPARATELY	X: 77402-701 O: 77402-711	GREY	
	b	X X X X X X X X X X X X X X X X X X X X X X X X X X X X X X X X X									
	c	X O X X X X X X X X X X X X X X X X X X X X X X X X X O X O X X X									
339-163	a	O X X X X X X X X X X X X X X X X X X X X X X X X X X X X X X X O	1.25 µm Au min.	N/A	1-3 µm SnPb	2-5 µm SnPb	6	to be ordered SEPARATELY	X: 77402-701 O: 77402-711	GREY	
	b										
	c	O X X X X X X X X X X X X X X X X X X X X X X X X X X X X X X X O									
339-164	a	X X X X X X X X X X X X X X X X X X X X X X X X X X X X X X X X X	0.80 µm Au min.	N/A	1-3 µm SnPb	2-5 µm SnPb	6	to be ordered SEPARATELY	X: 77402-701	GREY	PRINTING BERG YEAR-WEEK 68339-164
	b	X X X X X X X X X X X X X X X X X X X X X X X X X X X X X X X X X									
	c	X X X X X X X X X X X X X X X X X X X X X X X X X X X X X X X X X									
339-165	a	X X X X X X X X X X X X X X X X X X X X X X X X X X X X X X X X X	0.80 µm Au min.	N/A	1-3 µm SnPb	2-5 µm SnPb	6	to be ordered SEPARATELY	X: 77402-701	GREY	PRINTING BERG YEAR-WEEK 68339-165
	b										
	c	X X X X X X X X X X X X X X X X X X X X X X X X X X X X X X X X X									
339-166	a	O O O O O X X X X X X X X X X X X X X X X X X X X X X X X X X O	1.25 µm Au min.	N/A	gold flash	gold flash	6	to be ordered SEPARATELY	X: 77402-101 O: 77402-111	GREY	
	b	O O O O O X X X X X X X X X X X X X X X X X X X X X X X X X X O									
	c	O O O O O X X X X X X X X X X X X X X X X X X X X X X X X X X O									
339-167	a	X X X X X X X X X X X X X X X X X X X X X X X X X X X X X X X X X	1.25 µm Au min.	1.25 µm Au min.	gold flash	gold flash	13	to be ordered SEPARATELY	X: 77402-105 O: 77402-112	GREY	
	b	X X X X X X X X X X X X X X X X X X X X X X X X X X X X X X X X X									
	c	X X X X X X X X X X X X X X X X X X X X X X X X X X X X X X X X X									
339-168	a	X X X X X X X X X X X X X X X X X X X X X X X X X X X X X X X X X	1.25 µm Au min.	N/A	gold flash	gold flash	6	to be ordered SEPARATELY	X: 77402-101 O: 77402-111	GREY	
	b	X X X X X X X X X X X X X X X X X X X X X X X X X X X X X X X X X									
	c	X X X X X X X X X X X X X X X X X X X X X X X X X X X X X X X X X									
339-169	a	X X X X X X X X X X X X X X X X X X X X X X X X X X X X X X X X X	2.00 µm Au min.	2.00 µm Au min.	gold flash	gold flash	13	to be ordered SEPARATELY	X: 77402-105 O: 77402-112	GREY	
	b	X X X X X X X X X X X X X X X X X X X X X X X X X X X X X X X X X									
	c	X X X X X X X X X X X X X X X X X X X X X X X X X X X X X X X X X									
339-170	a	X X X X X X X X X X X X X X X X X X X X X X X X X X X X X X X X X	2.00 µm Au min.	2.00 µm Au min.	gold flash	gold flash	13	to be ordered SEPARATELY	X: 77402-105 O: 77402-112	GREY	
	b	X X X X X X X X X X X X X X X X X X X X X X X X X X X X X X X X X									
	c	X X X X X X X X X X X X X X X X X X X X X X X X X X X X X X X X X									
339-171	a	O O X X X X X X X X X X X X X X X X X X X X X X X X X X X X O O O	0.80 µm Au min.	2-5 µm SnPb	1-3 µm SnPb	2-5 µm SnPb	13	to be ordered SEPARATELY	X: 77402-705 O: 77402-712	GREY	
	b	X X X X X X X X X X X X X X X X X X X X X X X X X X X X X X X X X									
	c	O O O O O X X X X X X X X X X X X X X X X X X X X X X X X X X X									
339-172	a	O O X X X X X X X X X X X X X X X X X X X X X X X X X X X X O O O	0.80 µm Au min.	N/A	1-3 µm SnPb	2-5 µm SnPb	6	to be ordered SEPARATELY	X: 77402-701 O: 77402-711	GREY	
	b	X X X X X X X X X X X X X X X X X X X X X X X X X X X X X X X X X									
	c	O O O O O X X X X X X X X X X X X X X X X X X X X X X X X O O O									
339-173	a	O X X X X X X X X O X X X X X X X X X X X X X X X X X O O X X X O	1.25 µm Au min.	1.25 µm Au min.	gold flash	gold flash	13	to be ordered SEPARATELY	X: 77402-105 O: 77402-112	GREY	
	b										
	c	O X X X X X X X X O X X X X X X X X X X X X X X X X X O O X X X O									
339-174	a	O X X X X X X X X O X X X X X X X X X X X X X X X X X O O X X X O	1.25 µm Au min.	N/A	1-3 µm SnPb	2-5 µm SnPb	6	to be ordered SEPARATELY	X: 77402-701 O: 77402-711	GREY	
	b										
	c	O X X X X X X X X O X X X X X X X X X X X X X X X X X O O X X X O									
339-175	a	X X X X X X X X X X X X X X X X X X X X X X X X X X X X X X X O	1.25 µm Au min.	N/A	1-3 µm SnPb	2-5 µm SnPb	6	to be ordered SEPARATELY	X: 77402-701 O: 77402-711	GREY	
	b										
	c	X X X X X X X X X X X X X X X X X X X X X X X X X X X X X X X O									

mat'l code: SEE TABLE	tolerances unless otherwise specified	CUSTOMER COPY	FCI ELECTRONICS www.fciconnect.com
Dr: BCN ng, CP, date	linear	projection	title: P.L.P.F MALE CONNECTOR
W: K50028 OMA 98.10.18	angles	mm	product family: BACK PANEL
K: F90385 LMJ 99.07.12	dr: M.VISSCHERS 81.05.06	scale 1:1	code: 213
	engr: NOTTEAU.JF 99.07.12		size: A1
	Dr: D. MATHEVON 99.07.12		dwg no: 68339
	appd: JF.N 99.07.12		sheet: 9 of -
sheet / revision / index / sheet			

PRODUCT NO	ROW	PIN "O" AND "X" PLACED IN POSITION 1	2	3	4	5	6	7	8	9	10	11	12	13	14	15	16	17	18	19	20	21	22	23	24	25	26	27	28	29	30	31	32	PLATING THICKNESS CONTACT AREA F	CONTACT AREA C	PRESS FIT AREA V	TRANSITION AREA Z	PIN LENGTH DIM L	CODING PART	PRODUCT NR REPAIR PINS	COLOUR BODY	REMARKS
68339-176	a	X	O	X	X	X	X	X	X	X	X	X	X	X	X	X	X	X	X	X	X	X	X	X	X	X	X	X	X	X	X	O	X	1.25 µm Au min.	2-5 µm SnPb	1-3 µm SnPb	2-5 µm SnPb	6	to be ordered SEPARATELY	X: 77402-701 O: 77402-711	GREY	
	b																																									
	c	X	O	X	X	X	X	X	X	X	X	X	X	X	X	X	X	X	X	X	X	X	X	X	X	X	X	X	X	X	X	O	X									
68339-177	a	X	O	X	X	X	X	X	X	X	X	X	X	X	X	X	X	X	X	X	X	X	X	X	X	X	X	X	X	X	X	O	X	1.25 µm Au min.	2-5 µm SnPb	1-3 µm SnPb	2-5 µm SnPb	6	to be ordered SEPARATELY	X: 77402-701 O: 77402-711	GREY	
	b	X	X	X	X	X	X	X	X	X	X	X	X	X	X	X	X	X	X	X	X	X	X	X	X	X	X	X	X	X	X	X	X									
	c	X	O	X	X	X	X	X	X	X	X	X	X	X	X	X	X	X	X	X	X	X	X	X	X	X	X	X	X	X	X	O	X									
68339-178	a	X	O	X	X	X	X	X	X	X	X	X	X	X	X	X	X	X	X	X	X	X	X	X	X	X	X	X	X	X	X	O	X	1.25 µm Au min.	1.25 µm Au min.	gold flash	gold flash	13	to be ordered SEPARATELY	X: 77402-105 O: 77402-112	GREY	
	b																																									
	c	X	O	X	X	X	X	X	X	X	X	X	X	X	X	X	X	X	X	X	X	X	X	X	X	X	X	X	X	X	X	O	X									
68339-179	a	X	O	X	X	X	X	X	X	X	X	X	X	X	X	X	X	X	X	X	X	X	X	X	X	X	X	X	X	X	X	O	X	1.25 µm Au min.	1.25 µm Au min.	gold flash	gold flash	13	to be ordered SEPARATELY	X: 77402-105 O: 77402-112	GREY	
	b	X	X	X	X	X	X	X	X	X	X	X	X	X	X	X	X	X	X	X	X	X	X	X	X	X	X	X	X	X	X	X	X									
	c	X	O	X	X	X	X	X	X	X	X	X	X	X	X	X	X	X	X	X	X	X	X	X	X	X	X	X	X	X	X	O	X									
68339-180	a	X	X	X	X	X	X	X	X	X	X	X	X	X	X	X	O	X	X	X	X	X	X	X	X	X	X	X	X	X	X	X	O	1.25 µm Au min.	gold flash	gold flash	gold flash	6	to be ordered SEPARATELY	X: 77402-101 O: 77402-111	GREY	
	b	X	X	X	X	X	X	X	X	X	X	X	X	X	X	X	O	X	X	X	X	X	X	X	X	X	X	X	X	X	X	X	O									
	c	X	X	X	X	X	X	X	X	X	X	X	X	X	X	X	O	X	X	X	X	X	X	X	X	X	X	X	X	X	X	X	O									
68339-181	a	O	O	O	O	X	X	X	X	X	X	X	X	X	X	X	X	X	X	X	X	X	X	X	X	X	X	X	X	X	X	X	O	2.00 µm Au min.	2.00 µm Au min.	gold flash	gold flash	13	to be ordered SEPARATELY	X: 77402-105 O: 77402-112	GREY	
	b	O	O	O	O	X	X	X	X	X	X	X	X	X	X	X	X	X	X	X	X	X	X	X	X	X	X	X	X	X	X	X	O									
	c	O	O	O	O	X	X	X	X	X	X	X	X	X	X	X	X	X	X	X	X	X	X	X	X	X	X	X	X	X	X	X	O									
68339-182	a	X	X	X	X	X	X	X	X	X	X	X	X	X	X	X	O	X	X	X	X	X	X	X	X	X	X	X	X	X	O	X	X	1.25 µm Au min.	gold flash	gold flash	gold flash	6	to be ordered SEPARATELY	X: 77402-101 O: 77402-111	GREY	
	b	X	X	X	X	X	X	X	X	X	X	X	X	X	X	X	X	X	X	X	X	X	X	X	X	X	X	X	X	X	X	X	X									
	c	X	X	X	X	X	X	X	X	X	X	X	X	X	X	X	O	X	X	X	X	X	X	X	X	X	X	X	X	X	O	X	X									
68339-183	a	X	X	X	X	X	X	X	X	X	X	X	X	X	X	X	O	X	X	X	X	X	X	X	X	X	X	X	X	X	X	O	O	1.25 µm Au min.	gold flash	gold flash	gold flash	6	to be ordered SEPARATELY	X: 77402-101 O: 77402-111	GREY	
	b	X	X	X	X	X	X	X	X	X	X	X	X	X	X	X	O	X	X	X	X	X	X	X	X	X	X	X	X	X	X	O	O									
	c	X	X	X	X	X	X	X	X	X	X	X	X	X	X	X	O	X	X	X	X	X	X	X	X	X	X	X	X	X	X	O	O									
68339-184	a	X	X	X	X	X	X	X	X	X	X	X	X	X	X	X	O	X	X	X	X	X	X	X	X	X	X	X	X	X	X	O	O	1.25 µm Au min.	gold flash	gold flash	gold flash	6	to be ordered SEPARATELY	X: 77402-101 O: 77402-111	GREY	
	b																																									
	c	X	X	X	X	X	X	X	X	X	X	X	X	X	X	X	O	X	X	X	X	X	X	X	X	X	X	X	X	X	X	O	O									
68339-185	a	O	O	X	X	X	X	X	X	X	X	X	X	X	X	X	X	X	X	X	X	X	X	X	X	X	X	X	X	X	X	O	O	0.80 µm Au min.	2-5 µm SnPb	1-3 µm SnPb	2-5 µm SnPb	6	to be ordered SEPARATELY	X: 77402-701 O: 77402-711	GREY	
	b	O	O	X	X	X	X	X	X	X	X	X	X	X	X	X	X	X	X	X	X	X	X	X	X	X	X	X	X	X	X	O	O									
	c	O	O	X	X	X	X	X	X	X	X	X	X	X	X	X	X	X	X	X	X	X	X	X	X	X	X	X	X	X	X	O	O									
68339-186	a	X	X	X	X	X	X	X	X	X	X	X	X	X	X	X	X	X	X	X	X	X	X	X	X	X	X	X	X	X	X	O	O	0.80 µm Au min.	2-5 µm SnPb	1-3 µm SnPb	2-5 µm SnPb	6	to be ordered SEPARATELY	X: 77402-701 O: 77402-711	GREY	
	b	X	X	X	X	X	X	X	X	X	X	X	X	X	X	X	X	X	X	X	X	X	X	X	X	X	X	X	X	X	X	O	O									
	c	X	X	X	X	X	X	X	X	X	X	X	X	X	X	X	X	X	X	X	X	X	X	X	X	X	X	X	X	X	X	O	O									
68339-187	a	O	X	X	X	X	X	X	X	X	X	X	X	X	X	X	X	X	X	X	X	X	X	X	X	X	X	X	X	X	X	O	O	1.25 µm Au min.	gold flash	gold flash	gold flash	6	to be ordered SEPARATELY	X: 77402-101 O: 77402-111	GREY	
	b	O	X	X	X	X	X	X	X	X	X	X	X	X	X	X	X	X	X	X	X	X	X	X	X	X	X	X	X	X	X	O	O									
	c	O	X	X	X	X	X	X	X	X	X	X	X	X	X	X	X	X	X	X	X	X	X	X	X	X	X	X	X	X	X	O	O									
68339-188	a	O	O	O	O	X	X	X	X	X	X	X	X	X	X	X	X	X	X	X	X	X	X	X	X	X	X	X	X	X	X	O	O	1.25 µm Au min.	gold flash	gold flash	gold flash	6	to be ordered SEPARATELY	X: 77402-101 O: 77402-111	GREY	
	b	O	O	O	O	X	X	X	X	X	X	X	X	X	X	X	X	X	X	X	X	X	X	X	X	X	X	X	X	X	X	O	O									
	c	O	O	O	O	X	X	X	X	X	X	X	X	X	X	X	X	X	X	X	X	X	X	X	X	X	X	X	X	X	X	O	O									
68339-189	a	X	X	X	X	X	X	X	X	X	X	X	X	X	X	X	X	O	O	X	X	X	O	O	O	O	O	O	O	O	O	O	O	0.80 µm Au min.	2-5 µm SnPb	1-3 µm SnPb	2-5 µm SnPb	6	to be ordered SEPARATELY	X: 77402-701 O: 77402-711	GREY	
	b	X	X	X	X	X	X	X	X	X	X	X	X	X	X	X	X	O	O	X	X	X	O	O	O	O	O	O	O	O	O	O	O									
	c	X	X	X	X	X	X	X	X	X	X	X	X	X	X	X	X	O	O	X	X	X	O	O	O	O	O	O	O	O	O	O	O									
68339-190	a	O	O	X	X	X	X	X	X	X	X	X	X	X	X	X	O	X	X	X	X	X	X	X	X	X	X	X	X	X	X	X	O	2.00 µm Au min.	gold flash	gold flash	gold flash	6	to be ordered SEPARATELY	X: 77402-701 O: 77402-711	GREY	
	b	O	O	X	X	X	X	X	X	X	X	X	X	X	X	X	O	X	X	X	X	X	O	O	O	X	X	X	X	X	X	X	O									
	c	O	O	X	X	X	X	X	X	X	X	X	X	X	X	X	O	X	X	X	X	X	X	X	X	X	X	X	X	X	X	X	O									
68339-191	a	X	O	X	X	X	X	X	X	X	X	X	X	X	X	X	X	X	X	X	X	X	X	X	X	X	X	X	X	X	X	O	X	2.00 µm Au min.	2.00 µm Au min.	gold flash	gold flash	13	to be ordered SEPARATELY	X: 77402-105 O: 77402-112	GREY	
	b																																									
	c	X	O	X	X	X	X	X	X	X	X	X	X	X	X	X	X	X	X	X	X	X	X	X	X	X	X	X	X	X	X	O	X									
68339-192	a	X	O	X	X	X	X	X	X	X	X	X	X	X	X	X	X	X	X	X	X	X	X	X	X	X	X	X	X	X	X	O	X	2.00 µm Au min.	2.00 µm Au min.	gold flash	gold flash	13	to be ordered SEPARATELY	X: 77402-105 O: 77402-112	GREY	
	b	X	X	X	X	X	X	X	X	X	X	X	X	X	X	X	X	X	X	X	X	X	X	X	X	X	X	X	X	X	X	X	X									
	c	X	O	X	X	X	X	X	X	X	X	X	X	X	X	X	X	X	X	X	X	X	X	X	X	X	X	X	X	X	X	O	X									
68339-193	a																																	0.80 µm Au min.	0.80 µm Au min.	gold flash	gold flash	X=6; O=6 +=13	to be ordered SEPARATELY	X: 77402-101 O: 77402-111 +: 77402-105	GREY	
	b																																									
	c																																									
68339-194	a																																	0.80 µm Au min.	0.80 µm Au min.	gold flash	gold flash	X=6; O=6 +=13	to be ordered SEPARATELY	X: 77402-101 O: 77402-111 +: 77402-105	GREY	
	b																																									
	c																																									
68339-195	a	X	X	X	X	X	X	X	X	X	X	X	X	X	X	X	X	X	X	X	X	X	X	X	X	X	X	X	X	X	X	X	O	1.25 µm Au min.	2-5 µm SnPb	1-3 µm SnPb	2-5 µm SnPb	6	to be ordered SEPARATELY	X: 77402-701 O: 77402-711	GREY	
	b	X	X	X	X	X	X	X	X	X	X	X	X	X	X	X	X	X	X	X	X	X	X	X	X	X	X	X	X	X	X	X	O									
	c	X	X	X	X	X	X	X	X	X	X	X	X	X	X	X	X	X	X	X	X	X	X	X	X	X	X	X	X	X	X	X	O									
68339-196	a	O	X	X	X	X	X	X	X	X	X	X	X	X	X	X	X	X	X	X	X	X	X	X	X	X	X	X	X	X	X	X	O	0.80 µm Au min.	2-5 µm SnPb	1-3 µm SnPb	2-5 µm SnPb	6	to be ordered SEPARATELY	X: 77402-701 O: 77402-711	GREY	
	b	X	X	X	X	X	X	X	X	X	X	X	X	X	X	X	X	X	X	X	X	X	X	X	X	X	X	X	X	X	X	X	X									
	c	X	X	X	X	X	X	X	X	X	X	X	X	X	X	X	X	X	X	X	X	X	X	X	X	X	X	X	X	X	X	X	X									
68339-197	a	O	X	X	X	X	X	X	X	X	X	X	X	X	X	X	X	X	X	X	X	X	X	X	X	X	X	X	X	X	X	X	O	0.80 µm Au min.	2-5 µm SnPb	1-3 µm SnPb	2-5 µm SnPb	6	to be ordered SEPARATELY	X: 77402-701 O: 77402-711	GREY	
	b																																									
	c	X	X	X	X	X	X	X	X	X	X	X	X	X	X	X	X	X	X	X	X	X	X	X	X	X	X	X	X	X	X	X	X									
68339-198	a		O		X		X		X		X		X		X		X		X		X		X		X		X		X		X		O	0.80 µm Au min.	2-5 µm SnPb	1-3 µm SnPb	2-5 µm SnPb	6	to be ordered SEPARATELY	X: 77402-701 O: 77402-711	GREY	
	b																																									
	c		X		X		X		X		X		X		X		X		X		X		X		X		X		X		X		X									
68339-199	a	O		X		X		X		X		X		X		X		X		X		X		X		X		X		X		O		0.80 µm Au min.	2-5 µm SnPb	1-3 µm SnPb	2-5 µm SnPb	6	to be ordered SEPARATELY	X: 77402-701 O: 77402-711	GREY	
	b	X		X		X		X		X		X		X		X		X		X		X		X		X		X		X		X										
	c																																									
68339-200	a	X	X	X	X	X	X	X	X	X	X	X	X	X	X	X	O	O	X	X	X	X	X	X	X	X	X	X	X	X	X	X	X	0.80 µm Au min.	0.80 µm Au min.	gold flash	gold flash	13	to be ordered SEPARATELY	X: 77402-105 O: 77402-112	GREY	
	b																																									
	c	X	X	X	X	X	X	X	X	X	X	X	X	X	X	X	O	O	X	X	X	X	X	X	X	X	X	X	X	X	X	X	X									

part code: SEE TABLE

dr	sch no	dr	date
V	K50031	CWA	95.10.02
V	F90385	LJVU	99.07.12

tolerances unless otherwise specified

linear

angles

projection

mm

dr	M VISSCHERS	91.06.06	
engr	MOITEAU_F	99.07.12	
chr	D. MATHEVON	99.07.12	scale 1:1
appd	F.N	99.07.12	

CUSTOMER DOC

FCI ELECTRONICS www.fciconnect.com

title: P.L.P.F
MALE CONNECTOR

product family: BACK PANEL | code: 213

size: A4 | dwg no: 68339 | sheet: 10 of –

sheet | revision
notes | sheet

PRODUCT NO	ROW	PIN "O" AND "X" PLACED IN POSITION	PLATING THICKNESS: CONTACT AREA F	PLATING THICKNESS: CONTACT AREA G	PLATING THICKNESS: PRESS FIT AREA V	PLATING THICKNESS: TRANSITION AREA Z	PIN LENGTH DIM L	CODING PART	PRODUCT NR REPAIR PINS	COLOUR BODY	REMARKS
68339-201	a	X X X X X X X X X X X X X X X X X X X X X X X X X X X X X X X X	1.25 µm Au min.	gold flash	gold flash	gold flash	6	to be ordered SEPARATELY	X: 77402-101 O: 77402-111	GREY	
	b	X X X X X X X X X X X X X X X X X X X X X X X X X X X X X X X X									
	c	X X X X X X X X X X X X X X X X X X X X X X X X X X X X X X X X									
68339-202	a	X X X X X X X X X X X X X X X X X X X X X X X X X X X X X X X X	1.25 µm Au min.	gold flash	gold flash	gold flash	6	to be ordered SEPARATELY	X: 77402-101 O: 77402-111	GREY	
	b	X X X X X X X X X X X X X X X X X X X X X X X X X X X X X X X X									
	c	X X X X X X X X X X X X X X X X X X X X X X X X X X X X X X X X									
68339-203	a	X X X X X X X X X X X X X X X X O O X X X X X X X X X X X X X X	0.80 µm Au min.	0.80 µm Au min.	gold flash	gold flash	13	to be ordered SEPARATELY	X: 77402-105 O: 77402-112	GREY	
	b	X X X X X X X X X X X X X X X X O O X X X X X X X X X X X X X X									
	c	X X X X X X X X X X X X X X X X O O X X X X X X X X X X X X X X									
68339-204	a	O X X X X X X X X X X X X X X X X X X X X X X X X X X X X X X X	0.80 µm Au min.	0.80 µm Au min.	gold flash	gold flash	13	to be ordered SEPARATELY	X: 77402-105 O: 77402-112	GREY	
	b										
	c	O X X X X X X X X X X X X X X X X X X X X X X X X X X X X X X X									
68339-205	a	O X X X X X X X X X X X X X X X X X X X X X X X X X X X X X X O	0.80 µm Au min.	2-5 µm SnPb	1-3 µm SnPb	2-5 µm SnPb	6	to be ordered SEPARATELY	X: 77402-701 O: 77402-711	GREY	
	b										
	c	O X X X X X X X X X X X X X X X X X X X X X X X X X X X X X X O									
68339-206	a	O X X X X X X X X X X X X X X X X X X X X X X X X X X X X X X O	0.80 µm Au min.	2-5 µm SnPb	1-3 µm SnPb	2-5 µm SnPb	6	to be ordered SEPARATELY	X: 77402-701 O: 77402-711	GREY	
	b	O X X X X X X X X X X X X X X X X X X X X X X X X X X X X X X O									
	c	O X X X X X X X X X X X X X X X X X X X X X X X X X X X X X X O									
68339-207	a	X X X X X X X X X X X X X X X X X X X X X X X X X X X X X X X X	0.80 µm Au min.	0.80 µm Au min.	gold flash	gold flash	17	FITTED	X: 77402-120	GREY	
	b	X X X X X X X X X X X X X X X X X X X X X X X X X X X X X X X X									
	c	X X X X X X X X X X X X X X X X X X X X X X X X X X X X X X X X									
68339-208	a	O X X X X X X X X X X X X X X X X X X X X X X X X X X X X X X O	0.80 µm Au min.	0.80 µm Au min.	gold flash	gold flash	13	FITTED	X: 77402-105 O: 77402-112	GREY	
	b	X X X X X X X X X X X X X X X X X X X X X X X X X X X X X X X X									
	c	O X X X X X X X X X X X X X X X X X X X X X X X X X X X X X X O									
	a										
	b										
	c										
68339-210	a	X X X X X X X X X X X X X X X X X X X X X X X X X X X X X X X X	0.40 µm Au min.	0.40 µm Au min.	1-3 µm SnPb	2-5 µm SnPb	13	to be ordered SEPARATELY	X: 77402-105	GREY	TRIPLEX
	b	X X X X X X X X X X X X X X X X X X X X X X X X X X X X X X X X									
	c	X X X X X X X X X X X X X X X X X X X X X X X X X X X X X X X X									
68339-211	a	X X X X X X X X X X X X X X X X X X X X X X X X X X X X X X X X	1.25 µm Au min.	2-5 µm SnPb	1-3 µm SnPb	2-5 µm SnPb	6	to be ordered SEPARATELY	X: 77402-701	GREY	
	b	X X X X X X X X X X X X X X X X X X X X X X X X X X X X X X X X									
	c	X X X X X X X X X X X X X X X X X X X X X X X X X X X X X X X X									
68339-212	a	X X X X X X X X X X X X X X X X O O X X X X X X X X X X X X X X	0.80 µm Au min.	2-5 µm SnPb	1-3 µm SnPb	2-5 µm SnPb	6	to be ordered SEPARATELY	X: 77402-701 O: 77402-711	GREY	
	b										
	c	X X X X X X X X X X X X X X X X O O X X X X X X X X X X X X X X									
68339-213	a	+ + + + + + + X X + + + + + + X X + X + + + + + + X X X X + + + +	2.00 µm Au min.	2.00 µm Au min.	gold flash	gold flash	X= 6 +=13	to be ordered SEPARATELY	X: 77402-101 +: 77402-105	GREY	
	b	+ + + + + + + + + + + + + + + X X + + + + + + + X X X X + + + +									
	c	+ + + + + + + X X + + + + + + X X + X + + + + + + X X X X + + + +									
68339-214	a	+ + + + + + + X X + + + + + + X X + + + + + + + + X X X X + + + +	2.00 µm Au min.	2.00 µm Au min.	gold flash	gold flash	X=6 +=13	to be ordered SEPARATELY	X: 77402-101 +: 77402-105	GREY	
	b	+ + + + + + + X X + + + + + + X X + + + + + + + + X X X X + + + +									
	c	+ + + + + + + X X + + + + + + X X + + + + + + + + X X X X + + + +									
68339-215	a	X X X X X X X X X X O O O X X X X X X X X X X X X X X X X X X X	0.80 µm Au min.	2-5 µm SnPb	1-3 µm SnPb	2-5 µm SnPb	6	to be ordered SEPARATELY	X: 77402-701 O: 77402-711	GREY	
	b										
	c	X X X X X X X X X X O O O X X X X X X X X X X X X X X X X X X X									
68339-216	a	X X X X X X X X X X X X X X X X X X X X X X X X X X X X X X O O	0.80 µm Au min.	2-5 µm SnPb	1-3 µm SnPb	2-5 µm SnPb	6	to be ordered SEPARATELY	X: 77402-701 O: 77402-711	GREY	
	b										
	c	X X X X X X X X X X X X X X X X X X X X X X X X X X X X X X O O									
68339-217	a	O X X X X X X X O X X X X X X X X X X X X X X X X O O X X X X O	1.25 µm Au min.	1.25 µm Au min.	gold flash	gold flash	13	to be ordered SEPARATELY	X: 77402-105 O: 77402-112	GREY	
	b	O X X X X X X X O X X X X X X X X X X X X X X X X O O X X X X O									
	c	O X X X X X X X O X X X X X X X X X X X X X X X X O O X X X X O									
68339-218	a	O X X X X X X X O X X X X X X X X X X X X X X X X O O X X X X O	1.25 µm Au min.	2-5 µm SnPb	1-3 µm SnPb	2-5 µm SnPb	6	to be ordered SEPARATELY	X: 77402-701 O: 77402-711	GREY	
	b	O X X X X X X X O X X X X X X X X X X X X X X X X O O X X X X O									
	c	O X X X X X X X O X X X X X X X X X X X X X X X X O O X X X X O									
68339-219	a	O O X O X X X X X X X X X X X X X X X X X X X X X X X X O O O O	0.80 µm Au min.	0.80 µm Au min.	gold flash	gold flash	13	to be ordered SEPARATELY	X: 77402-105 O: 77402-112	GREY	
	b										
	c	O O X O X X X X X X X X X X X X X X X X X X X X X X X X O O O O									
68339-220	a	O O X O X X X X X X X X X X X X X X X X X X X X X X X X O O O O	0.80 µm Au min.	0.80 µm Au min.	gold flash	gold flash	13	to be ordered SEPARATELY	X: 77402-105 O: 77402-112	GREY	
	b	O O X O X O X X X X X X X X X X X X X X X X X X X X X X O O O O									
	c	O O X O X X X X X X X X X X X X X X X X X X X X X X X X O O O O									

mat'l code: SEE TABLE			tolerances unless otherwise specified	CUSTOMER COPY	FCI ELECTRONICS www.fciconnect.com
Dr	ECN no	dr	date		
J	H40488	DDB	94.08.14	linear	projection
K	F80385	LMV	99.07.12	angles	mm
				dr M.VISSCHERS 92.12.07	title P.L.P.F MALE CONNECTOR
				engr NOTTEAU.JF 99.07.12	product family BACK PANEL code 213
				Dr B. MATHEVON 99.07.12	size A1 dwg no 68339 sheet 11 of
				appd JFN 99.07.12	scale 1:1
sheet index	revision sheet				

| PRODUCT NO | PIN "O" AND "X" PLACED IN POSITION | | |

PRODUCT NO	PIN "O" AND "X" PLACED IN POSITION (ROW a / b / c, pins 1–32)	PLATING THICKNESS: CONTACT AREA F	CONTACT AREA G	PRESS FIT AREA V	TRANSITION AREA Z	PIN LENGTH DIM L	CODING PART	PRODUCT NR REPAIR PINS	COLOUR BODY	REMARKS
68339-246	a OOOOOOXXXXXXXXXXXXXXXXXXXXXXXXXXXXXXXX b XXXXXXXXXXXXXXXXXXXXXXXXXXXXXXXXXXXXXXXX c OOOOOOOOXXXXXXXXXXXXXXXXXXXXXXXXXXXXXXXX	0.40 µm Au min.	0.40 µm Au min.	1-3 µm SnPb	2-5 µm SnPb	13	to be ordered SEPARATELY	X: 77402-105 O: 77402-112	GREY	
68339-247	a XXXXXXXXXXXXXXXXXXXXXXXXXXXXXXXXOOOO b XXXXXXXXXXXXXXXXXXXXXXXXXXXXXXXXXXXXXXXX c XXXXXXXXXXXXXXXXXXXXXXXXXXXXXXXXXXXXOOOO	0.40 µm Au min.	0.40 µm Au min.	1-3 µm SnPb	2-5 µm SnPb	13	to be ordered SEPARATELY	X: 77402-105 O: 77402-112	GREY	
68339-248	a OOOOOOOXXXXXXXXXXXXXXXXXXXXXXXXXXXXXXXX b XXXXXXXXXXXXXXXXXXXXXXXXXXXXXXXXXXXXXXXX c OOOOOOOOXXXXXXXXXXXXXXXXXXXXXXXXXXXXXXXX	0.40 µm Au min.	2-5 µm SnPb	1-3 µm SnPb	2-5 µm SnPb	13	to be ordered SEPARATELY	X: 77402-705 O: 77402-712	GREY	
68339-249	a XXXXXXXXXXXXXXXXXXXXXXXXXXXXXXXXOOOO b XXXXXXXXXXXXXXXXXXXXXXXXXXXXXXXXXXXXXXXX c XXXXXXXXXXXXXXXXXXXXXXXXXXXXXXXXXXXXOOOO	0.40 µm Au min.	2-5 µm SnPb	1-3 µm SnPb	2-5 µm SnPb	13	to be ordered SEPARATELY	X: 77402-705 O: 77402-712	GREY	
68339-250	a ΔΔΔΔΔΔXXΔΔΔΔΔΔΔΔΔΔΔΔΔΔΔΔΔΔXXΔΔΔΔΔΔ b ΔΔΔΔΔΔXXXXXXXXXXXXXXXXXXXXXXXXXXXXXXXX c ΔΔΔXXXXXΔΔΔΔΔΔΔΔΔΔΔΔΔΔΔΔXXΔΔΔΔΔΔ	1.25 µm Au min.	2-5 µm SnPb	1-3 µm SnPb	2-5 µm SnPb	6	to be ordered SEPARATELY	X: 77402-701 O: 77402-711 Δ: 77402-708	GREY	
68339-251	a ΔΔΔΔΔΔΔΔΔΔΔΔΔΔΔΔΔΔΔΔΔΔΔΔΔΔΔΔΔΔΔΔΔΔΔΔΔΔΔΔ b ΔΔΔΔΔΔΔΔΔΔΔΔXΔΔΔΔΔΔΔΔΔΔΔΔΔΔΔΔΔΔΔΔΔΔΔΔΔΔΔ c ΔΔΔΔΔΔΔΔΔΔΔΔΔΔΔΔΔΔΔΔΔΔΔΔΔΔΔΔΔΔΔΔΔΔΔΔΔΔΔΔ	1.25 µm Au min.	2-5 µm SnPb	1-3 µm SnPb	2-5 µm SnPb	6	to be ordered SEPARATELY	X: 77402-701 O: 77402-711 Δ: 77402-708	GREY	
68339-252	a XΔXXXΔXΔXΔXΔXΔXΔXΔΔXΔXΔXΔXΔXΔXΔXΔXΔXΔX b XΔXΔXΔXXXXXXXXXXXXXXXXXXXXXXXXXXXXXXXX c XΔXXXXXΔXΔXΔXΔXΔXΔΔXΔXΔXΔXΔXΔXΔXΔXΔXΔX	1.25 µm Au min.	2-5 µm SnPb	1-3 µm SnPb	2-5 µm SnPb	6	to be ordered SEPARATELY	X: 77402-701 O: 77402-711 Δ: 77402-708	GREY	
68339-253	a XΔXΔXΔXXXXXXXXXXXXXXXXXXXXXXXXXXXXXXXX b XΔXXXXXXXXXXXXXXXXXXXXXXXXXXXXXXXXXXXXXXXX c XΔXΔXΔXΔXΔXΔXΔXΔXΔX

| PRODUCT NO | ROW | PIN "O" AND "X" PLACED IN POSITION | | |

PRODUCT NO	ROW	PIN "O" AND "X" PLACED IN POSITION	PLATING THICKNESS CONTACT AREA F	CONTACT AREA C	PRESS FIT AREA V	TRANSITION AREA Z	PIN LENGTH DIM L	CODING PART	PRODUCT NR REPAIR PINS	COLOUR BODY	REMARKS
		1 2 3 4 5 6 7 8 9 10 11 12 13 14 15 16 17 18 19 20 21 22 23 24 25 26 27 28 29 30 31 32									
68339-296	a										
	b										
	c										
68339-297	a										
	b										
	c										
68339-298	a										
	b										
	c										
68339-299	a										
	b										
	c										
68339-300	a										
	b										
	c										
68339-301	a	O O O O O O O X X X X X X X X X X X X X X X X O O X O X X X X X X X X	0.40 µm Au min.	N/A	1-3 µm SnPb	2-5 µm SnPb	6	to be ordered SEPARATELY	X: 77402-701 O: 77402-711	GREY	
	b	X X X X X X X X X X X X X X X X X X X X X X X X X X X X X X X X X X X X									
	c	O O O O O O O X X X X X X X X X X X X X X X X O O X O X X X X X X X X									
68339-302	a	X X X X X X X X X X X X X X X X X X X X X X X X X X X X X X X X O O O O	0.40 µm Au min.	N/A	1-3 µm SnPb	2-5 µm SnPb	6	to be ordered SEPARATELY	X: 77402-701 O: 77402-711	GREY	
	b	X X X X X X X X X X X X X X X X X X X X X X X X X X X X X X X X X X X X									
	c	X X X X X X X X X X X X X X X X X X X X X X X X X X X X X X X X O O O O									
68339-303	a	O O X X X X X X X X X X X X X X X X X X X X X X X X X X X X X X X X X X	0.40 µm Au min.	N/A	1-3 µm SnPb	2-5 µm SnPb	6	to be ordered SEPARATELY	X: 77402-701 O: 77402-711	GREY	
	b	X X X X X X X X X X X X X X X X X X X X X X X X X X X X X X X X X X X X									
	c	O O X X X X X X X X X X X X X X X X X X X X X X X X X X X X X X X X X X									
68339-304	a	Δ Δ Δ Δ Δ Δ Δ Δ Δ Δ Δ Δ Δ Δ Δ Δ Δ Δ Δ Δ Δ Δ Δ Δ Δ Δ Δ Δ Δ Δ Δ Δ Δ Δ	2 µm Au min.	N/A	1-3 µm SnPb	2-5 µm SnPb	6	to be ordered SEPARATELY	Δ: 77402-708	GREY	
	b										
	c	Δ Δ Δ Δ Δ Δ Δ Δ Δ Δ Δ Δ Δ Δ Δ Δ Δ Δ Δ Δ Δ Δ Δ Δ Δ Δ Δ Δ Δ Δ Δ Δ Δ Δ									
68339-305	a	X X X X X X X X X X X X X X X X X X X X X X X X X X X X X X X X X O O	2 µm Au min.	N/A	1-3 µm SnPb	2-5 µm SnPb	6	to be ordered SEPARATELY	X: 77402-701 O: 77402-711	GREY	
	b										
	c	X X X X X X X X X X X X X X X X X X X X X X X X X X X X X X X X X O O									
68339-306	a	Δ Δ Δ Δ Δ Δ Δ Δ Δ Δ Δ Δ Δ Δ Δ Δ Δ Δ Δ Δ Δ Δ Δ Δ Δ Δ Δ Δ Δ Δ Δ Δ X	0.80 µm Au min.	N/A	1-3 µm SnPb	2-5 µm SnPb	6	to be ordered SEPARATELY	X: 77402-701 Δ: 77402-708	GREY	
	b	Δ Δ Δ Δ Δ Δ Δ Δ Δ Δ Δ Δ Δ Δ Δ Δ Δ Δ Δ Δ Δ Δ Δ Δ Δ Δ Δ Δ Δ Δ Δ Δ X									
	c	Δ Δ Δ Δ Δ Δ Δ Δ Δ Δ Δ Δ Δ Δ Δ Δ Δ Δ Δ Δ Δ Δ Δ Δ Δ Δ Δ Δ Δ Δ Δ Δ X									
68339-307	a	X Δ Δ Δ Δ Δ Δ Δ Δ Δ Δ Δ Δ Δ Δ Δ Δ Δ Δ Δ Δ Δ Δ Δ Δ Δ Δ Δ Δ Δ Δ Δ X	0.80 µm Au min.	N/A	1-3 µm SnPb	2-5 µm SnPb	6	to be ordered SEPARATELY	X: 77402-701 Δ: 77402-708	GREY	
	b	X Δ Δ Δ Δ Δ Δ Δ Δ Δ Δ Δ Δ Δ Δ Δ Δ Δ Δ Δ Δ Δ Δ Δ Δ Δ Δ Δ Δ Δ Δ Δ X									
	c	X Δ Δ Δ Δ Δ Δ Δ Δ Δ Δ Δ Δ Δ Δ Δ Δ Δ Δ Δ Δ Δ Δ Δ Δ Δ Δ Δ Δ Δ Δ Δ X									
68339-308	a	X X X X X X X X Δ Δ Δ Δ Δ Δ Δ Δ Δ Δ Δ Δ Δ Δ Δ Δ Δ Δ Δ Δ Δ Δ X X X	0.80 µm Au min.	N/A	1-3 µm SnPb	2-5 µm SnPb	6	to be ordered SEPARATELY	X: 77402-701 Δ: 77402-708	GREY	
	b	Δ Δ Δ Δ Δ Δ Δ Δ Δ Δ Δ Δ Δ Δ Δ Δ Δ Δ Δ Δ Δ Δ Δ Δ Δ Δ Δ Δ Δ Δ Δ Δ Δ Δ									
	c	X X X X X X X X Δ Δ Δ Δ Δ Δ Δ Δ Δ Δ Δ Δ Δ Δ Δ Δ Δ Δ Δ Δ Δ Δ X X X									
68339-309	a	X X X X X X X X Δ Δ Δ Δ Δ Δ Δ Δ Δ Δ Δ Δ Δ Δ Δ Δ Δ Δ Δ Δ Δ Δ X X X	0.80 µm Au min.	N/A	1-3 µm SnPb	2-5 µm SnPb	6	to be ordered SEPARATELY	X: 77402-701 Δ: 77402-708	GREY	
	b	X X X X X X X X X X X X X X X X X X X X X X X X X X X X X X X X Δ Δ Δ Δ									
	c	X X X X X X X X Δ Δ Δ Δ Δ Δ Δ Δ Δ Δ Δ Δ Δ Δ Δ Δ Δ Δ Δ Δ Δ Δ X X X									
68339-310	a	X X X O X X X X X X X X X X X X X X X X X X X X X X X X X X X X X O	0.80 µm Au min.	N/A	1-3 µm SnPb	2-5 µm SnPb	6	to be ordered SEPARATELY	X: 77402-701 O: 77402-711	GREY	
	b										
	c	O X X O X X X X X X X X X X X X X X X X X X X X X X X X X X X X X O									
68339-311	a	X X X O X X X X X X X X X X X X X X X X X X X X X X X X X X X X X O	0.80 µm Au min.	N/A	1-3 µm SnPb	2-5 µm SnPb	6	to be ordered SEPARATELY	X: 77402-701 O: 77402-711	GREY	
	b	X X X O X X X X X X X X X X X X X X X X X X X X X X X X X X X X X O									
	c	O X X O X X X X X X X X X X X X X X X X X X X X X X X X X X X X X O									
68339-312	a	X X X X X X X X X O X X X X X X X X X X X X X X X X X X X X X X X O	0.80 µm Au min.	N/A	1-3 µm SnPb	2-5 µm SnPb	6	to be ordered SEPARATELY	X: 77402-701 O: 77402-711	GREY	
	b	X X X X X X X X X X X X X X X X X X X X X X X X X X X X X X X X X O									
	c	O X X X X X O X X O X X X X X X X X X X X X X X X X X X X X X X X O									
68339-313	a	X X X X X X X X X X O O O O O X X X X X X X X X X X X X X X X X X X X	1.25 µm Au min.	1.25 µm Au min.	gold flash	gold flash	13	to be ordered SEPARATELY	X: 77402-101 O: 77402-112	GREY	
	b	X X X X X X X X X X O O O O O X X X X X X X X X X X X X X X X X X X X									
	c	X X X X X X X X X X O O O O O X X X X X X X X X X X X X X X X X X X X									
68339-314	a	X X X X X X X X X X O O O O O	1.25 µm Au min.	1.25 µm Au min.	gold flash	gold flash	13	to be ordered SEPARATELY	X: 77402-101 O: 77402-112	GREY	
	b	X X X X X X X X X X O O O O O									
	c	X X X X X X X X X X O O O O O									
68339-315	a										
	b										
	c										
68339-316	a										
	b										
	c										
68339-317	a										
	b										
	c										
68339-318	a										
	b										
	c										
68339-319	a										
	b										
	c										
68339-320	a										
	b										
	c										

mat'l code: SEE TABLE	tolerances unless otherwise specified	CUSTOMER COPY	FCI ELECTRONICS www.fciconnect.com
ID: ECN NR / DP / DATE	linear	projection	title: P.L.P.F MALE CONNECTOR
G: F90154 / DLE / 99.03.03	angles	mm	product family: BACK PANEL / code: 213
H: F90365 / LAU / 99.07.12	DR: D.MATHEVON 97.03.18		size: A1 / dwg no: 68339
J: F90649 / JFN / 99.10.15	CHK: JF.MOTTEAU 99.07.12		sheet: 15 of 15
	APP: D. MATHEVON 99.07.12	scale: 1:1	
	REV: JFN 99.07.12		
sheet index / revision sheet			