DIMENSIONS mm (inches)

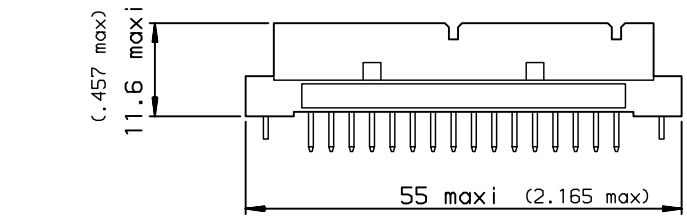

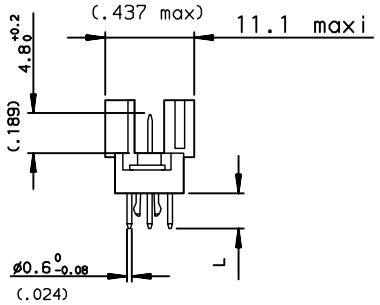

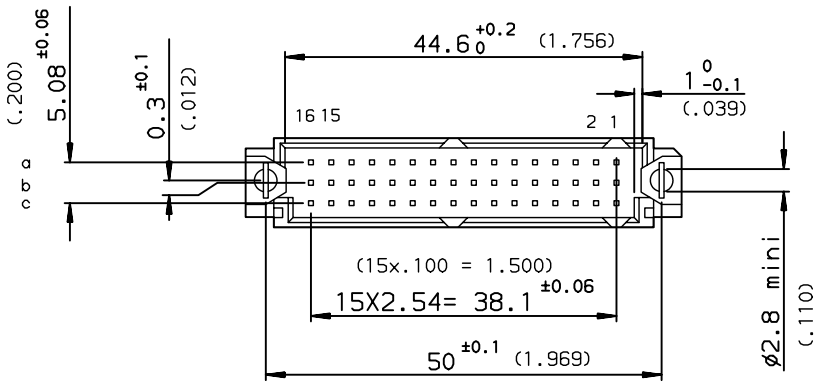

PART NUMBER	8609	□	□	76	□	□	□	5	000	E1

PIN OUT
- rows a-b-c — 3 — 48
- rows a-c — 4 — 32

NUMBER OF CONTACTS

TERMINATION
- L = 2.70 ±0.25 (.106) — 24
- L = 4.65 ±0.25 (.183) — 14

OPTIONS
- no option — 7
- with harpoons
  - for PCB thickness 1.6 mm — H
  - for PCB thickness 2.4 mm — A
  - for PCB thickness 3.2 mm — R

PERFORMANCE CLASS
- DIN 41612 class 3 — 4
- DIN 41612 class 2 — 5
- DIN 41612 class 1 — 6

PCB DRILLING

component side

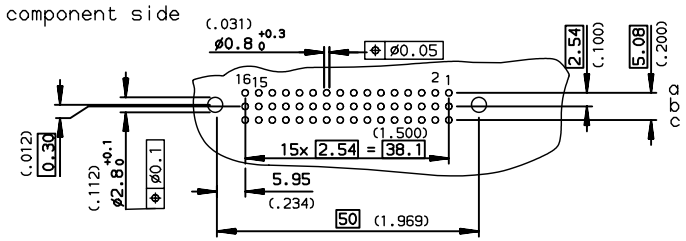

GENERAL CHARACTERISTICS AND ROHS INFORMATIONS:

SEE DRAWING C-8609-0000A

European Views

www.fciconnect.com			surface ISO 1302	tolerance std ISO 406 ISO 1101		projection	mm
			TOLERANCES UNLESS OTHERWISE SPECIFIED				
Dr	ROUILLARD	1992/07/07	ANGULAR	LINEAR	0.X ±0.1	size A3	Scale 1.5
Eng	TARON	1992/07/07			0.XX ±0.1		
Chr	LEGARE	1992/07/07	0.XX° ±2°		0.XXX ±0.1	ECN	LS06-0095
Appr	LEGARE	1992/07/07	Product family		DIN 8609	Spec ref	-

rev	ecn no	dr	date
B	-	ROU	1996/02/20
C	LS05-001	JTA	2005/03/01
D	LS06-0095	LGO	2006/07/21
-	-	-	-
-	-	-	-
-	-	-	-
-	-	-	-

title: STRAIGHT MALE - STYLE R/2
SOLDER TO BOARD

dwg no: C-8609-0278 Rev. D

catalog no -

CUSTOMER sheet 1 of 1

Copyright FCI.