P.C. RIGHT ANGLE TEST POINT JACKS

JACKS-90° TEST POINT

09-9350-1-03XX
09-9350-1-044XX

BASIC PART NO. FINISH COLOR

TEFLON* INSULATED SIDE MOUNT TEST JACK FOR .080 PROBE

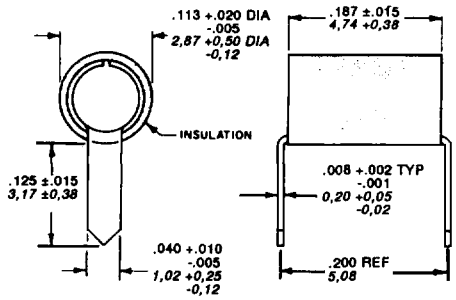

FOR MIL-C-39024/18B STYLE ORDER AS 09-9350-1-035XX

09-9350-1-03XX TEFLON* INSULATED
09-9350-1-044XX SIDE MOUNTED TEST JACK FOR .080 PROBE

P.C. JACKS-CLOSED ENTRY-SIDE MOUNT

09-9064-1-XX

BASIC PART NO. COLOR

TEST POINT P.C. JACK FOR .040 PIN

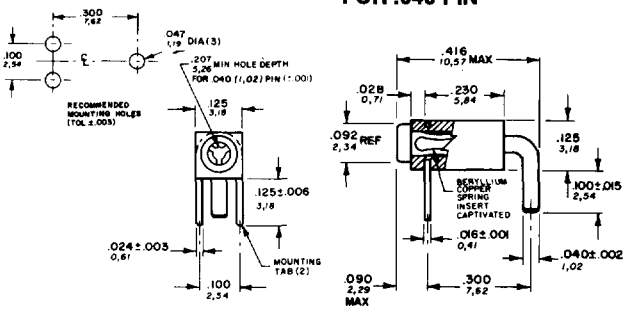

ACCEPTS .040 (1,02) PIN

PART NO.	BODY (BRASS)	SPRING (BERYLLIUM COPPER)
09-9064-1-03	GOLD	GOLD
04	ELECTRO-TIN	ELECTRO-TIN
06	ELECTRO-TIN	GOLD

COMPONENT FINISH

09-9202-1-03XX
09-9302-1-03XX
09-9305-1-03XX

BASIC PART NO. FINISH COLOR

NYLON INSULATED SIDE MOUNT JACK FOR .080 PIN

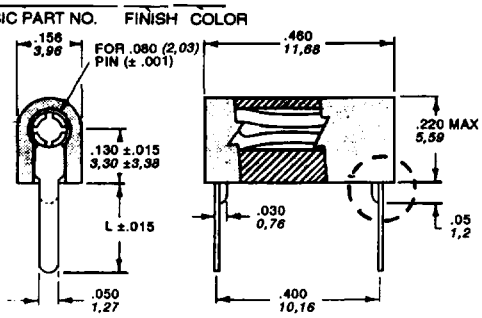

WITHOUT TABS
09-9202-1-03XX
09-9305-1-03XX
(BOTH ENDS)

UNLESS OTHERWISE SPECIFIED .XXX = ±.010
ACCEPTS .080 (2,03) PIN

PART NO.	L	BOARD THICKNESS
09-9202-1-03XX	.130 3,30	1/16 1,59 MAX.
09-9302-1-03XX	.219 5,56	1/8 3,18 MAX
09-9305-1-03XX	.219 5,56	1/8 3,18 MAX

▶ FOR MIL-C-39024/11 ORDER AS 09-9201-1-035XX QUALIFIED PRODUCTS LISTED (OPL)

09-9065-1-XX
09-9088-1-XX

BASIC PART NO. FINISH

TEST POINT P.C. JACK FOR .040 PIN - SQUARE WRAP

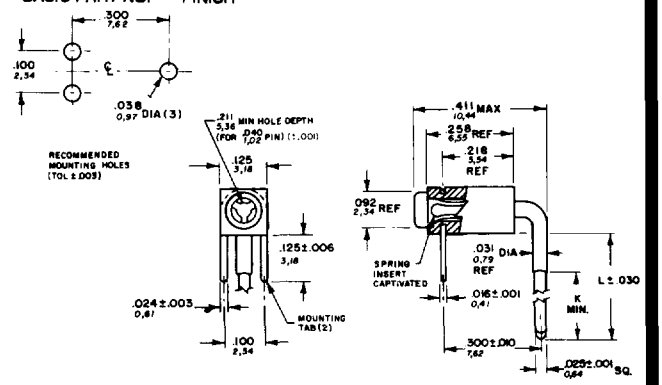

ACCEPT .040 (1,02) PIN

PART NO.	BODY (BRASS)	SPRING (BERYLLIUM COPPER)	L	K
09-9065-1-03	GOLD	GOLD		
04	ELECTRO-TIN	ELECTRO-TIN	.700 17,78	.570 14,48
06	ELECTRO-TIN	GOLD		
09-9088-1-03	GOLD	GOLD		
04	ELECTRO-TIN	ELECTRO-TIN	.430 10,92	.390 9,91
06	ELECTRO-TIN	GOLD		

COMPONENT FINISH

21-9205-1-01XX SILVER PLATED
21-9205-1-03XX GOLD PLATED

BASIC PART NO. FINISH COLOR

NYLON INSULATED SIDE MOUNT JACK FOR .080 PIN

PROBE ACCESS FROM BOTH ENDS OR TOP

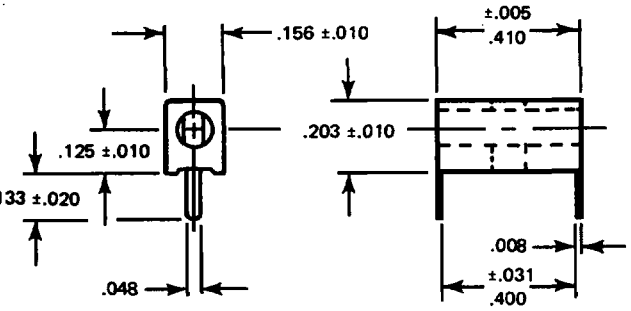

UNLESS OTHERWISE SPECIFIED XXX = ±.010
ACCEPTS .080 (2,03) PIN

09-9094-1-XX

BASIC PART NO. FINISH

TEST POINT - SIDE MOUNT P.C. JACK FOR .080 PIN

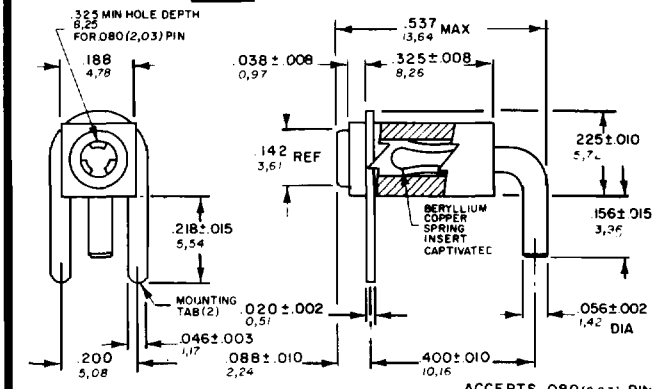

ACCEPTS .080 (2,03) PIN

COMPONENT FINISH

PART NO.	BODY (BRASS)	SPRING	MOUNTING TAB
09-9094-1-03	GOLD	GOLD	GOLD
09-9094-1-04	ELECTROTIN	ELECTROTIN	TIN
09-9094-1-06	ELECTROTIN	GOLD	GOLD

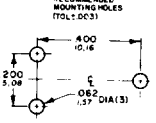

MANUFACTURED BY CONCORD® "THE COMPONENT PEOPLE"

FOR ADDITIONAL SIZES AND MATERIALS, CONTACT FACTORY

COLOR CODE FOR ORDERING

BLK	BRN	RED	ORN	YEL	GRN	BLU	PUR	GRY	WHT
10	11	12	13	14	15	16	17	18	19

30 GREAT JONES STREET
NEW YORK, N.Y. 10012-1115
(212) 777-6571 • 1-800-847-4162
FAX (212) 995-0161

*Teflon® is Du Pont's registered trademark