REVISIONS			
REV	DESCRIPTION	DATE	APPROVED
01_1	REVISED	5/14/98	3/31/99
B	PER EC 0U20-0116-01-03	13NOV01	13NOV01

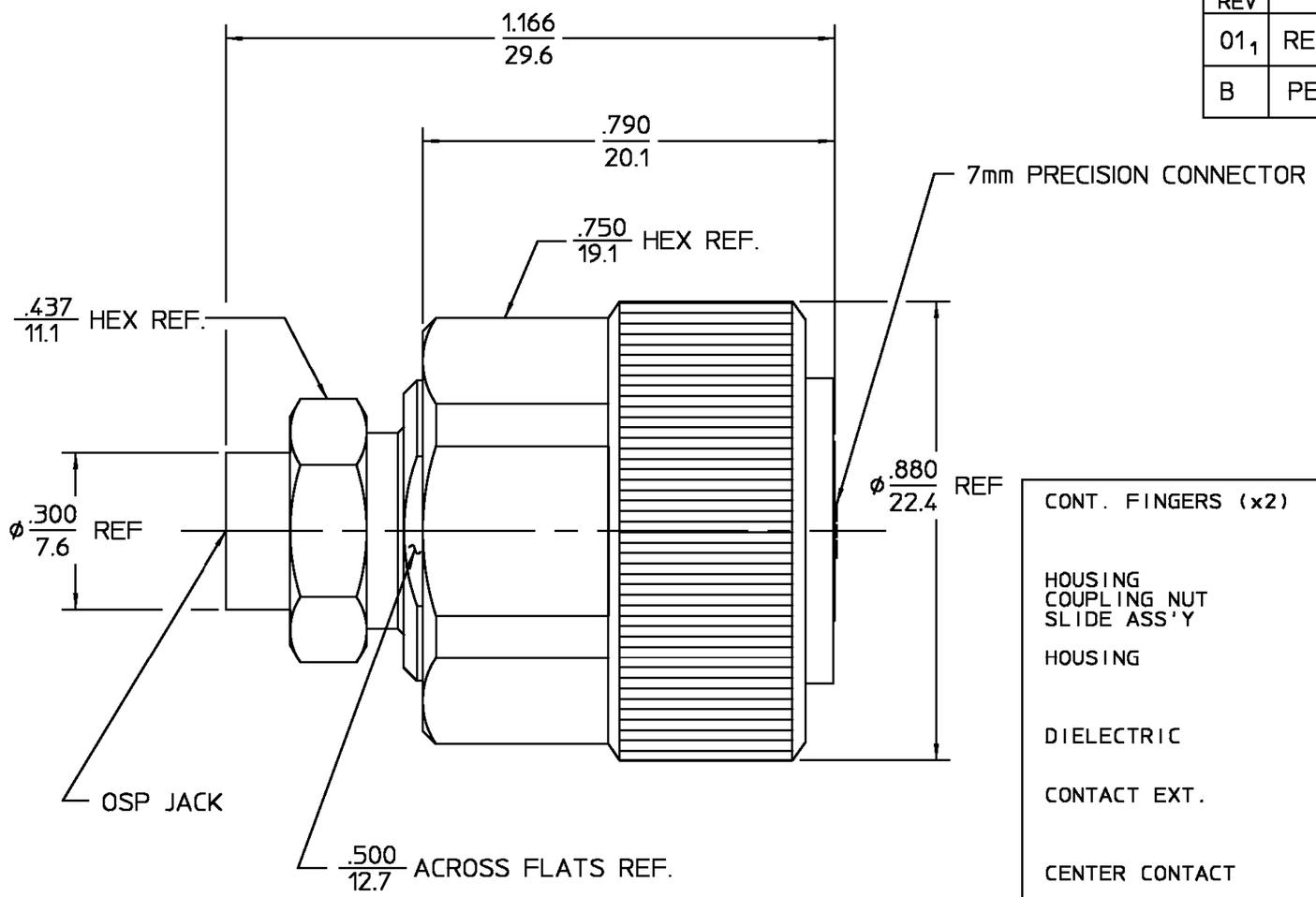

COMPONENT	MATERIAL	FINISH
CONT. FINGERS (x2)	STAINLESS STEEL PER ASTM-A484 AND ASTM-A582, TYPE 303	N/A
HOUSING COUPLING NUT SLIDE ASS'Y	STAINLESS STEEL PER ASTM-A484 AND ASTM-A582, TYPE 303	ELECTRO-POLISHED
HOUSING	STAINLESS STEEL PER ASTM-A484 AND ASTM-A582, TYPE 303	PASSIVATE PER QQ-P-35
DIELECTRIC	PTFE FLUOROCARBON PER ASTM-D-1457	N/A
CONTACT EXT.	BERYLLIUM COPPER PER ASTM-B-196 OR ASTM-B-197, ALLOY C17300, CONDITION H	GOLD PLATE PER MIL-G-45204
CENTER CONTACT	BRASS PER ASTM-B-16, HALF HARD	GOLD PLATE PER MIL-G-45204

NOTES:

1. CAPTURED CENTER CONTACT
2. FREQ. RANGE: DC-18.0 GHz
3. VSWR: 1.03 +.004 f(GHz) (MAX)

.XXX = in
XX.X = mm (REF)

UNLESS OTHERWISE SPECIFIED DIMENSIONS ARE IN INCHES

FRAC.	DEC.	ANGLES
± 1/64	±.020	± 1°

		DATE
DRAWN BY	CD	6/30/82
CHECKED BY	PCV	7/1/82
APP'D BY	WK	7/2/82

AMP

AMP Incorporated
140 Fourth Avenue
Waltham, MA 02451-7599

These drawings and specifications are the property of AMP Interconnect Div. and shall not be reproduced or copied or used in whole or in part as the basis for the manufacture or sale of item(s) without written permission.

USE ASS'Y PROCEDURE

NO. A.P. N/A

TITLE 7mm PRECISION TO "OSP" JACK ADAPTER

SIZE	CODE IDENT NO.		REV
B	26805	4582-2700-00	01_1
SCALE 4:1			SHEET 1 OF 1

CUSTOMER DRAWING

AMP PART # 1059720-1
SHEET 1 OF 1 REV B