SHEET of

DWG. NO. C342702

No OF WAYS	No OF POSITIONS	BLANK POSITIONS	HOUSING COLOURS NATURAL	BLACK	RED	GREY ⟨6⟩	YELLOW	GREEN	BLUE	DIMENSION 'X'	DIMENSION 'Y'
2	2	NONE	342702-1	342702-3	342702-5	342702-6	342702-7	342702-8	342702-9	3.96	9.86
3	3	NONE	342703-1	342703-3	342703-5	342703-6	342703-7	342703-8	342703-9	7.92	13.82
4	4	NONE	342704-1	342704-3	342704-5	342704-6	342704-7	342704-8	342704-9	11.89	17.80
5	5	NONE	342705-1	342705-3	342705-5	342705-6	342705-7	342705-8	342705-9	15.85	21.75
6	6	NONE	342706-1	342706-3	342706-5	342706-6	342706-7	342706-8	342706-9	19.81	25.71
7	7	NONE	342707-1	342707-3	342707-5	342707-6	342707-7	342707-8	342707-9	23.77	29.67
8	8	NONE	342708-1	342708-3	342708-5	342708-6	342708-7	342708-8	342708-9	27.74	33.64
9	9	NONE	342709-1	342709-3	342709-5	342709-6	342709-7	342709-8	342709-9	31.70	37.60
10	10	NONE	342710-1	342710-3	342710-5	342710-6	342710-7	342710-8	342710-9	35.66	41.56
11	11	NONE	342711-1	342711-3	342711-5	342711-6	342711-7	342711-8	342711-9	39.62	45.52
12	12	NONE	342712-1	342712-3	342712-5	342712-6	342712-7	342712-8	342712-9	43.58	49.49
5	3	2&4				342722-6				15.85	21.75
3	2	2			342721-5					7.92	13.82
5	3	2,4			342722-5					15.85	21.75
7	4	2,4,6			342723-5					23.77	29.67
9	5	2,4,6,8			342724-5					31.70	37.60
11	6	2,4,6,8,10			342750-5					39.62	45.52
9	8	2							343266-9	31.70	37.60

DO NOT SCALE
DIMENSIONS IN m.m.

METRIC

3rd ANGLE PROJECTION

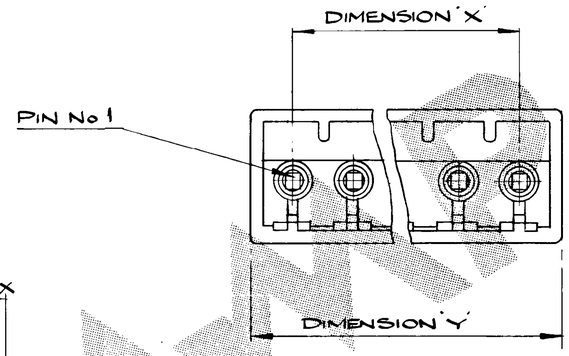

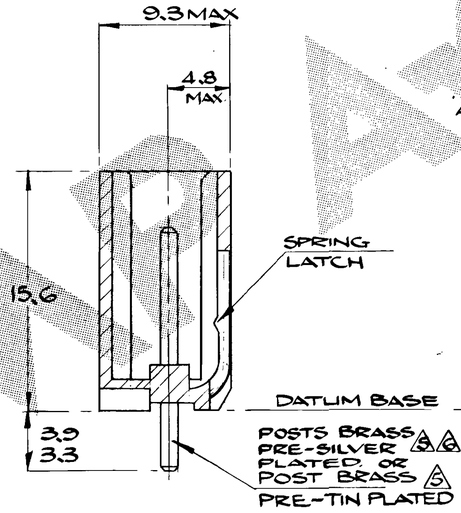

SECTION 'A'-'A'

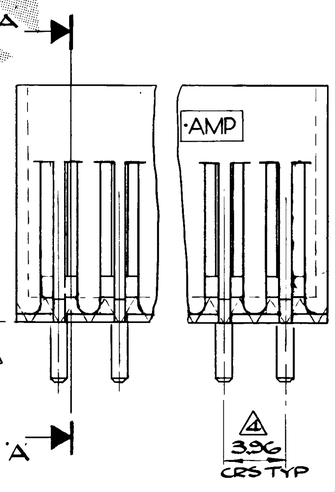

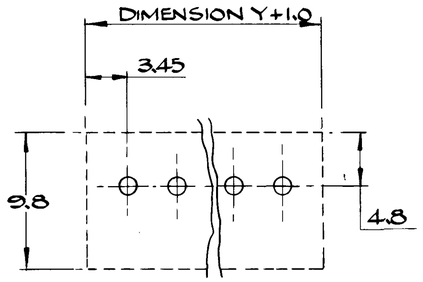

P.C.B. FOOTPRINT

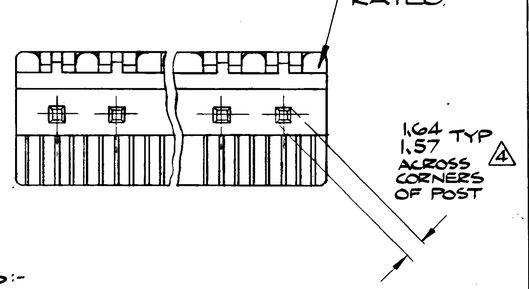

NOTES:-

1. FOR LATEST ISSUE OF DRAWING CONSULT AMP ENGINEERING.
2. PERFORMANCE SPECIFICATION 108-3012.
3. MATES WITH CONNECTOR ASSEMBLIES CONFORMING TO AMP SPEC 108-19045
4. ⟨4⟩ AS MEASURED AT DATUM BASE
5. ⟨5⟩ POST TO CONFORM TO SOLDERABILITY SPEC BS 2011 PART 2.1T 1981 (IEC68-2-20) SOLDER BATH DWELL TIME NOT TO EXCEED 3 SECS. AT A TEMP. OF 250° C MAX.
6. ⟨6⟩ GREY VERSION WITH SILVER PLATED POSTS ONLY.

OTHER TREATMENT	FINISH	MATERIAL	PART NUMBER
—	—	—	—

CUSTOMER DWG
FOR REFERENCE ONLY

© COPYRIGHT 19 83 BY AMP of GREAT BRITAIN LTD. ALL INTERNATIONAL RIGHTS RESERVED. AMP PRODUCTS MAY BE COVERED BY BRITISH AND FOREIGN PATENTS AND/OR PATENTS PENDING.

RELEASED FOR PUBLICATION 27 SEPT. 1983

ISS	REVISION RECORD	DR	DATE
E	-6 GREY VERSION ADDED	C	17.2.89
D	AMP LOGO ADDED		6.7.87
C	PREVIOUS MOD CANCELLED		9.85
B	POLARIZING DET. CHANGED		9.85
A	343266 ADDED		3/1/85
0	RELEASE FOR PRODUCTION		27.7.84

TOLERANCES UNLESS OTHERWISE STATED:-
DEC ± 0,5
ANGLES ± 1°

DR. D.R. TERRY
CHK. 27/9/83
APP.

INS. DIA. RANGE | WIRE RANGE | SCALE 5:1

AMP of Great Britain Ltd.
TERMINAL HOUSE STANMORE MIDDX.

NAME MT6 FULLY SHROUDED POST HEADER

A1 | LOC. E | DWG. NO. C342702 | SHEET of

AMP

AARQUE 7875/82