THIS DRAWING IS UNPUBLISHED. RELEASED FOR PUBLICATION - ,- .
© COPYRIGHT - By - ALL RIGHTS RESERVED.

LOC	DIST
AJ	16

REVISIONS

P	LTR	DESCRIPTION	DATE	DWN	APVD
	H1	REVISED PER ECO-11-005030	11MAR11	RK	HMR

1. RG-59/U,59A/U,59B/U,62/U,62A/U,62B/U,71/U,71A/U,71B/U,210/U
2. RG-58/U,58A/U,58B/U,58C/U,141/U,141A/U,142/U,142A/U,142B/U, 55/U,55A/U,55B/U,223/U,400/U
3. USE INSRTUCTION SHEET 408-6851
4. SEE SEPERATE RESTRICTED CUSTOMER DRAWING

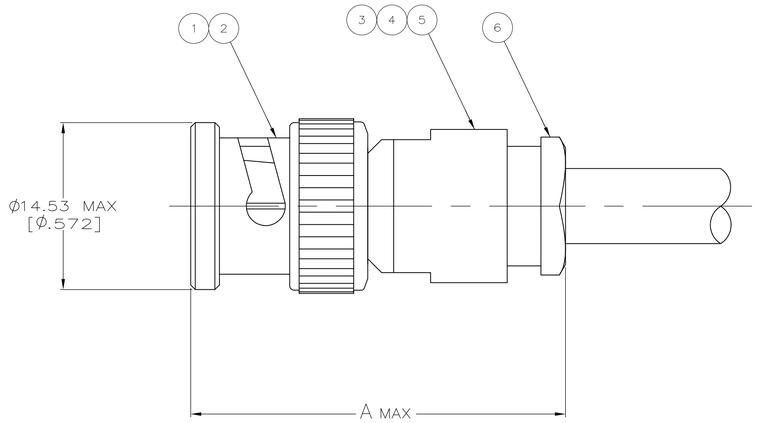

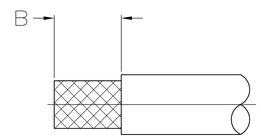

STEP #1

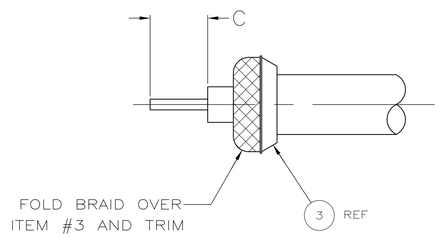

STEP #2

RECOMMENDED STRIP LENGTH

SUPSD BY 221265-2 4		–	–	–	–	–	–	–	–	–	–	–	2-221265-1
SUPSD BY 221265-2 4		–	–	–	–	–	–	–	–	–	–	–	2-221265-0
	OBSOLETE	AMP 1-221265-8	RG-179/U,179A/U,179B/U,187/U,187A/U	3.96 [.156]	7.92 [.312]	31.75 [1.250]	1-221280-2	221276-3	221277-4	1-221281-2	221268-6	221282-9	1-221265-8
	OBSOLETE	AMP 1-221265-7	RG-180/U,195/U	3.96 [.156]	7.92 [.312]	31.75 [1.250]	1-221280-1	221276-3	221277-3	1-221281-1	221268-6	221282-8	1-221265-7
	OBSOLETE	AMP 1-221265-6	RG-8/U,8A/U,9/U,9A/U,9B/U,213/U,214/U	3.18 [.125]	7.14 [.281]	38.10 [1.500]	221274-3	221271-3	221279-1	221273-3	221269-2	1-221282-0	1-221265-6
	OBSOLETE	AMP 1-221265-5	RG-174/U,316/U	3.96 [.156]	7.92 [.312]	31.75 [1.250]	1-221280-2	221276-3	221277-4	1-221281-2	221268-4	221282-9	1-221265-5
	OBSOLETE	AMP 1-221265-4	RG-302/U	3.96 [.156]	7.92 [.312]	31.75 [1.250]	221280-9	221276-3	221277-1	1-221281-0	221268-4	221282-7	1-221265-4
	OBSOLETE	AMP 1-221265-3	RG-303/U	3.96 [.156]	7.92 [.312]	31.75 [1.250]	1-221280-1	221276-3	221277-3	221281-9	221268-2	221282-6	1-221265-3
	OBSOLETE	AMP 1-221265-2	RG-122/U	3.96 [.156]	7.92 [.312]	31.75 [1.250]	1-221280-1	221276-3	221277-3	1-221281-1	221268-2	221282-8	1-221265-2
		AMP 1-221265-1	1	3.96 [.156]	7.92 [.312]	31.75 [1.250]	1-221280-0	221276-3	221277-2	1-221281-0	221268-4	413752-7	1-221265-1
		AMP 1-221265-0	2	3.96 [.156]	7.92 [.312]	31.75 [1.250]	221280-9	221276-3	221277-1	221281-9	221268-2	413752-6	1-221265-0
	OBSOLETE	AMP 221265-9	RG-179/U,179A/U,179B/U,187/U,187A/U	3.96 [.156]	7.92 [.312]	31.75 [1.250]	221280-8	221276-2	221277-4	221281-8	221268-6	221282-4	221265-9
	OBSOLETE	AMP 221265-8	RG-180/U,195/U	3.96 [.156]	7.92 [.312]	31.75 [1.250]	221280-6	221276-2	221277-3	221281-6	221268-6	221282-3	221265-8
	OBSOLETE	AMP 221265-7	RG-8/U,8A/U,9/U,9A/U,9B/U,213/U,214/U	3.18 [.125]	7.14 [.281]	38.10 [1.500]	221274-2	221271-2	221279-1	221273-2	221269-2	221282-5	221265-7
	OBSOLETE	AMP 221265-6	RG-174/U,316/U	3.96 [.156]	7.92 [.312]	31.75 [1.250]	221280-8	221276-2	221277-4	221281-8	221268-4	221282-4	221265-6
		AMP 221265-2	1	3.96 [.156]	7.92 [.312]	31.75 [1.250]	221280-4	221276-2	221277-2	221281-4	221268-9	413752-2	221265-2
		AMP 221265-1	2	3.96 [.156]	7.92 [.312]	31.75 [1.250]	221280-2	221276-2	221277-1	221281-2	221268-8	413752-1	221265-1
		STAMPING	CABLE SIZE	C	B	A	6 NUT QTY=1	5 WASHER QTY=1	4 GASKET QTY=1	3 CLAMP QTY=1	2 CONTACT QTY=1	1 PLUG ASSY QTY=1	PART NUMBER

THIS DRAWING IS A CONTROLLED DOCUMENT.

DIMENSIONS: MM [INCHES]

TOLERANCES UNLESS OTHERWISE SPECIFIED:
0 PLC ± –
1 PLC ± –
2 PLC ± 0.25 [.010]
3 PLC ± –
4 PLC ± –
ANGLES ± –

MATERIAL –
FINISH –

DWN B.SCOTT 2-26-91
CHK J. LIPPERT 3-15-91
APVD M. PHILLIPS 4-3-91
PRODUCT SPEC 108-12075
APPLICATION SPEC –
WEIGHT –

TE Connectivity

NAME PLUG,CATEGORY A, SERIES BNC

SIZE A1 | CAGE CODE 00779 | DRAWING NO C-221265 | RESTRICTED TO –

CUSTOMER DRAWING | SCALE 4:1 | SHEET 1 OF 1 | REV H1

4805 (3/11)