Alle Rechte vorbehalten/ *All rights reserved*

Material:

Shielding: Copper alloy with nickel plating
Housing: NY-46, UL-94-V0, black
Insert: NY-46, UL-94-V0, black
Contact: Alloy, C5210, selective gold plating
over nickel in contact area.
Tin plating over nickel in solder area.

Electrical and mechanical data:
RF performance Category 5 acc. ISO IEC 11 801:2002
Temperature: -20°C to 70°C
Min 500 mating cycles

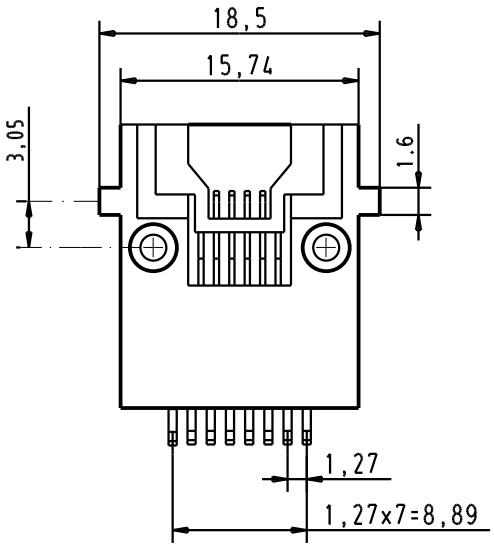

PCB layout component side

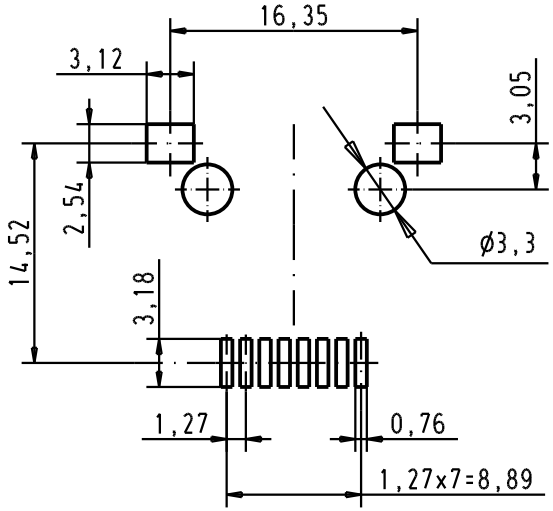

A-A

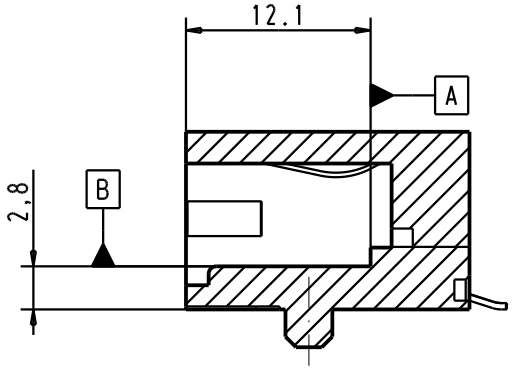

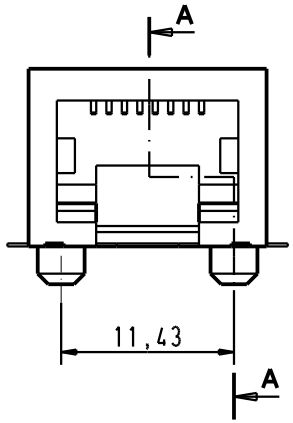

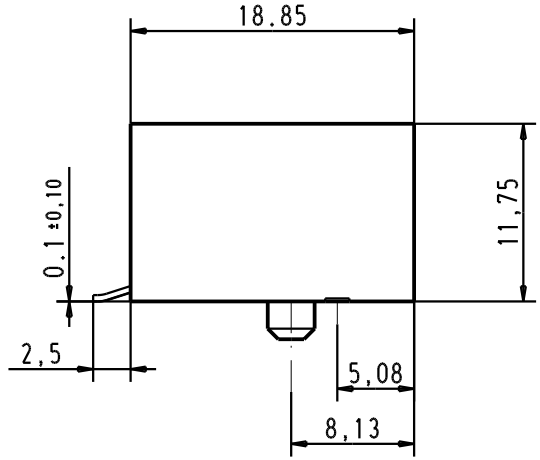

				Dat.	Name			Maßstab/ *Scale*
			Detail.	31/03/04	JH	All Dim. in mm Orig. Size DIN A 4	Hybrid / Push Pull Modular RJ 45 Jack with x8 SMT signal terminaisons + x2 grounding SMT terminaisons	2:1
			Insp.					
			Stand.					
32489	15/dec/04	JFB	HARTING EURL F-95972 Paris				TB 09 45 551 1100	Blatt/ *Page* 1
31884	31/03/04	JH					Sub.	
Mod.	Dat.	Name						