REVISIONS			
REV.	DESCRIPTION	DATE	APPROVED
A	Created Drawing	02/06/13	DC

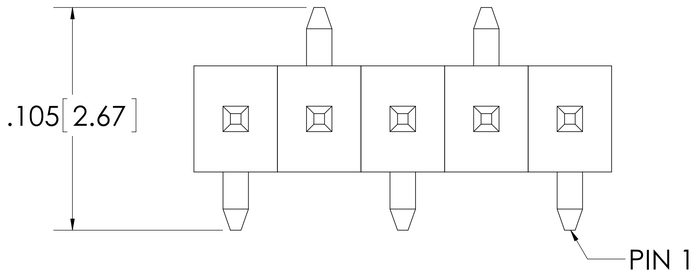

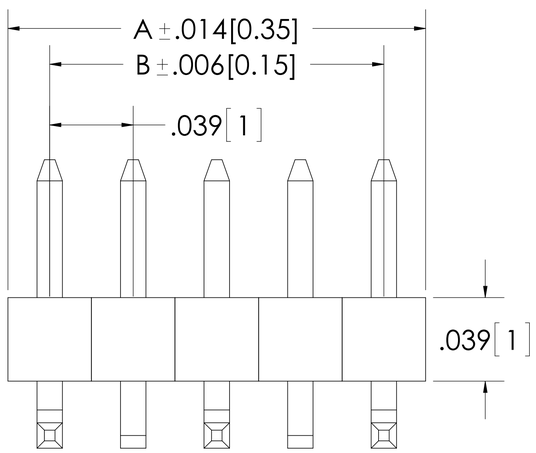

RECOMMENDED PCB LAYOUT
General Tolerance .002[0.050]

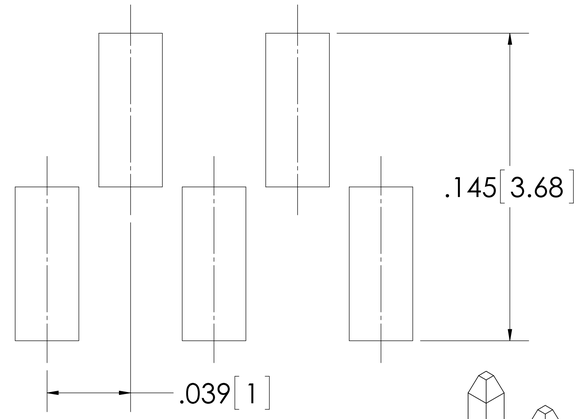

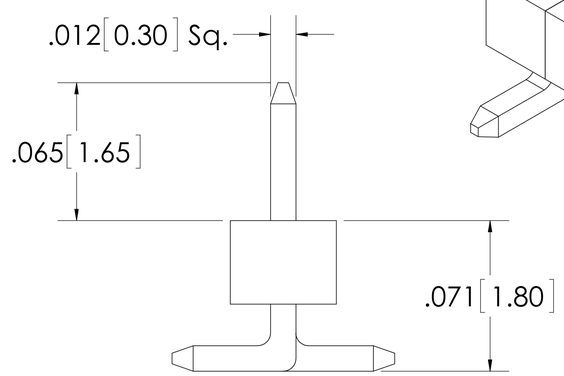

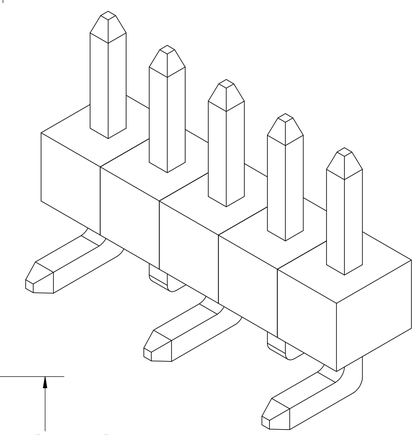

Specifications:
Current Rating: 1.0 Ampere
Insulation Resistance: 1000M Ohms Min.
Dielectric Withstanding: 300V AC
Contact Resistance: 20m Ohms Max.
Operating Temperature: -40°C to +105°C

Materials:
Contact Material: Phosphor Bronze
Plating: Gold Flash over entire pin
Insulator Material: Thermoplastic, UL94V-0, LCP
Color: Natural

Max. Process Temperatures:
Peak: 260°C up to 20 secs.
Process: 230°C up to 60 secs.
Wave: 260°C up to 6 Secs.
Manual Solder: 350°C up to 5 secs.

All materials must meet Major League Electronics requirements for environmental protection.

CONTACTS	DIMENSIONS			
	A		B	
02	0.079	2.00	0.039	1.00
03	0.118	3.00	0.079	2.00
04	0.157	4.00	0.118	3.00
05	0.197	5.00	0.157	4.00
06	0.236	6.00	0.197	5.00
	Inches	MM	Inches	MM

ORDERING INFORMATION

BLTSM-7 XX - S - F - V - S - XX - P - LF

- **Pins Per Row** 02,03,04,05,06
- **Single Row Option**
- **Contact Plating:** F = Gold Flash Over All
- **Vertical Surface Mount**
- **Footprint Orientation** M Footprint
- **Packaging** TR=Tape and Reel, TB=Tube
- **Pick and Place Cap**
- **Lead Free**

PROPRIETARY AND CONFIDENTIAL
THE INFORMATION CONTAINED IN THIS DRAWING IS THE SOLE PROPERTY OF MAJOR LEAGUE ELECTRONICS. ANY REPRODUCTION IN PART OR AS A WHOLE WITHOUT THE WRITTEN PERMISSION OF MAJOR LEAGUE ELECTRONICS IS PROHIBITED.

UNLESS OTHERWISE SPECIFIED:
DIMENSIONS ARE IN INCHES
TOLERANCES:
ONE PLACE DECIMALS ±.100
TWO PLACE DECIMAL ±.010
THREE PLACE DECIMAL ±.005
FOUR PLACE DECIMAL ±.002
INTERPRET GEOMETRIC TOLERANCING PER:
MATERIAL --
FINISH --

	DATE	NAME
DRAWN	02/06/13	GWE
CHECKED	02/06/13	DRC
ENG APPR.		
MFG APPR.		
Q.A.		

COMMENTS:

RoHS COMPLIANT 2002/95/EC

Major League Electronics
4235 Earnings Way
New Albany, IN 47150
Phone: 812-944-7244 Fax: 812-944-7268
e-Mail: mle@mlelectronics.com

TITLE: BLTSM-7-SV-S
SIZE B | DWG. NO. Q:ASSEM/BL/BLTSM-7-SV-S | REV A
SCALE: 8:1 | WEIGHT: | SHEET 1 OF 1