REVISIONS			
REV.	DESCRIPTION	DATE	APPROVED
A	Created Drawing	02/06/13	DC

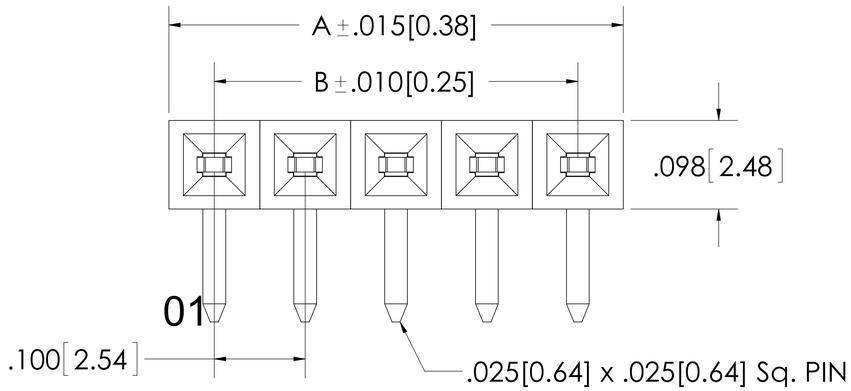

RECOMMENDED PCB LAYOUT
General Tolerance .002 [0.05]

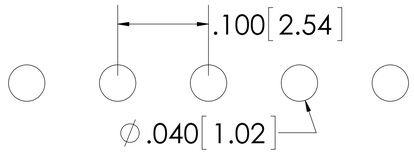

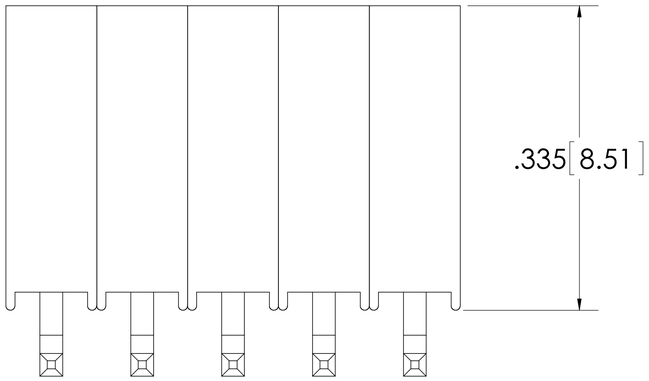

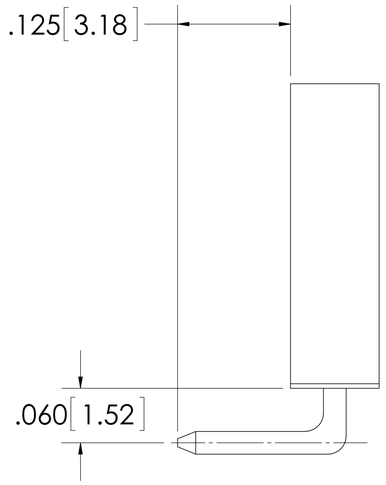

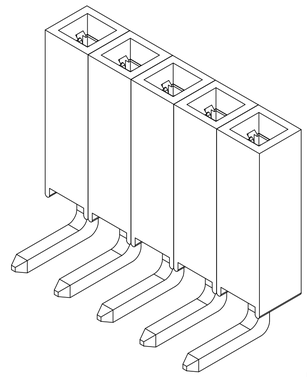

Specifications:
Current Rating: 3.0 Ampere
Insulation Resistance: 1000M Ohms Min.
Dielectric Withstanding: 600V AC
Contact Resistance: 20m Ohms Max.
Operating Temperature: -40°C to +105°C

Materials:
Contact Material: Copper Alloy
Plating: Gold Flash over entire pin
Insulator Material: Thermoplastic, UL94V-0, PBT
Color: Natural

Max. Process Temperatures:
Peak: 260°C up to 20 secs.
Process: 230°C up to 60 secs.
Wave: 260°C up to 6 Secs.
Manual Solder: 350°C up to 5 secs.

All materials must meet Major League Electronics requirements for environmental protection.

CONTACTS	DIMENSIONS			
	A		B	
02	0.220	5.58	0.100	2.54
03	0.320	8.12	0.200	5.08
04	0.420	10.66	0.300	7.62
05	0.520	13.2	0.400	10.16
06	0.620	15.74	0.500	12.7
	Inches	MM	Inches	MM

BLSSR-1 XX - S - F - XX - LF

- XX: Number of Pins Per Row 02,03,04,05,06
- S: Single Row
- F: Contact Plating: F - Gold Flash Over All
- XX: Packaging: TB = Tube
- LF: Lead Free

PROPRIETARY AND CONFIDENTIAL
THE INFORMATION CONTAINED IN THIS DRAWING IS THE SOLE PROPERTY OF MAJOR LEAGUE ELECTRONICS. ANY REPRODUCTION IN PART OR AS A WHOLE WITHOUT THE WRITTEN PERMISSION OF MAJOR LEAGUE ELECTRONICS IS PROHIBITED.

UNLESS OTHERWISE SPECIFIED:
DIMENSIONS ARE IN INCHES
TOLERANCES:
ONE PLACE DECIMALS ±.100
TWO PLACE DECIMAL ±.010
THREE PLACE DECIMAL ±.005
FOUR PLACE DECIMAL ±.002
INTERPRET GEOMETRIC TOLERANCING PER:
MATERIAL --
FINISH --

	DATE	NAME
DRAWN	02/06/13	GWE
CHECKED	02/06/13	DRC
ENG APPR.		
MFG APPR.		
Q.A.		

COMMENTS:

RoHS COMPLIANT 2002/95/EC

Major League Electronics
4235 Earnings Way
New Albany, IN 47150
Phone: 812-944-7244 Fax: 812-944-7268
e-Mail: mle@mlelectronics.com

TITLE: BLSSR-1-S
SIZE B | DWG. NO. Q:ASSEM/BL/BLSSR-1-S | REV A
SCALE: 8:1 | WEIGHT: | SHEET 1 OF 1