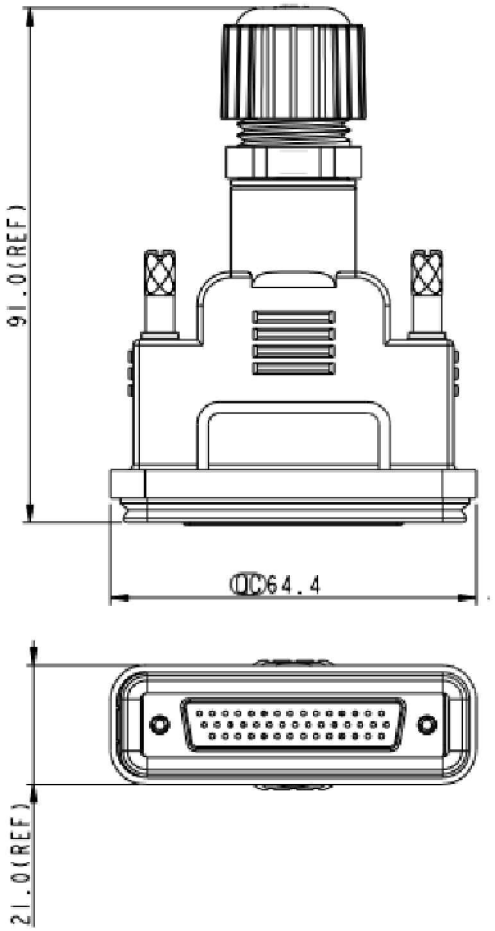

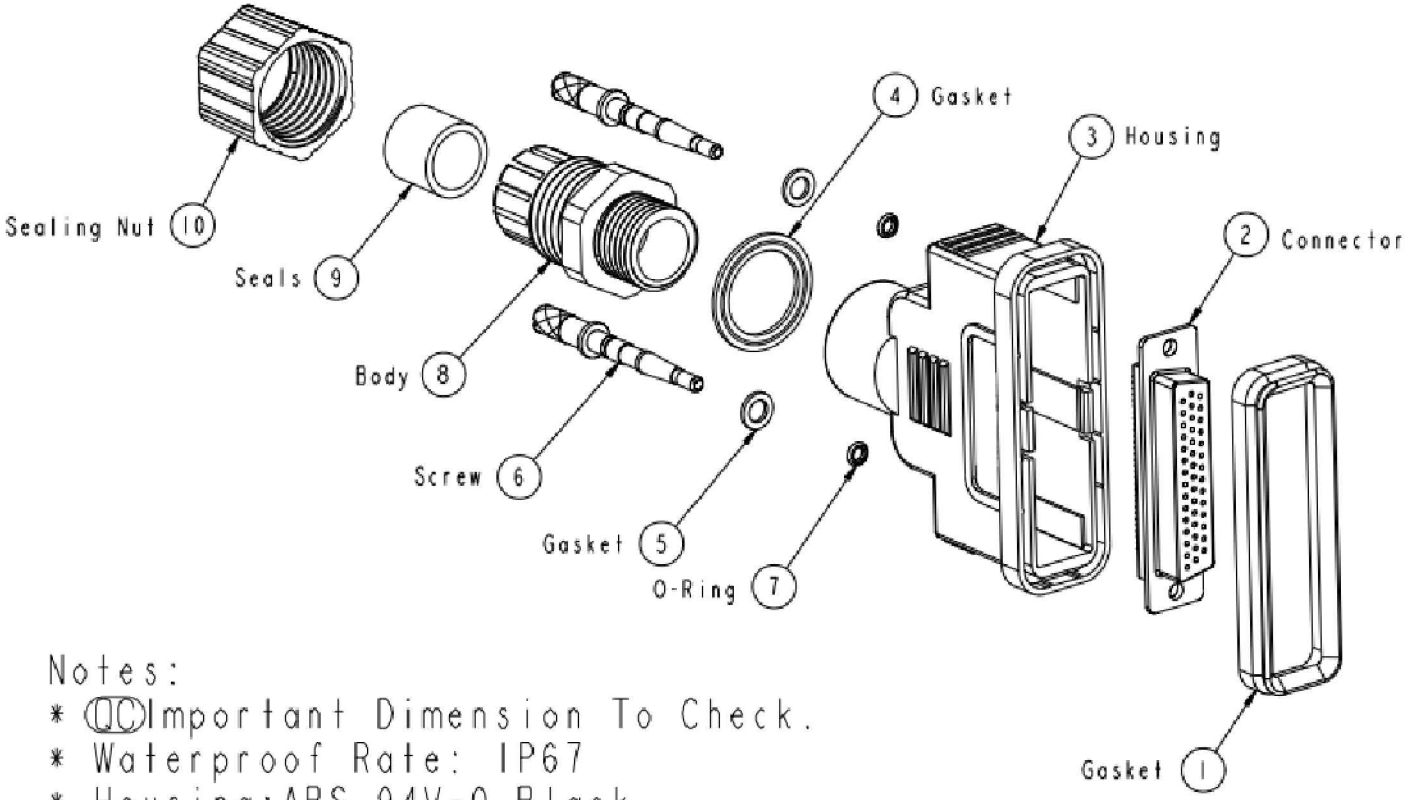

Notes:

* Important Dimension To Check.
* Waterproof Rate: IP67
* Housing:ABS 94V-0,Black
* Connector: HD-SUB 44Pin
* Seals For Cable OD:Ø6.0mm~Ø10.0mm
* One Set Unassembled in One PE Bag

RoHS compliant

UNIT:mm

Scale	Free						Date	Name	Customer-No.
TOLERANCE						Drawn	22.04.2014	Joanna	
	±0.5					Approved	22.04.2014	Joanna	ASSMANN WSW-No. A-HDS44-HOOD-WP
DIM	TOL								Drawing-No. ASS 6264 CO rev00
X.°	±X°								
X.X°	±X°	0	Drawn	22.04.2014	Joanna				
Angle	TOL	Id.	Modification	Date	Name				Replace Sheet

ASSMANN WSW components