MINI-DIP

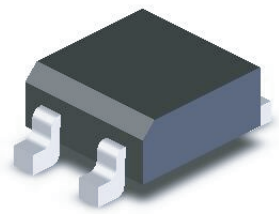

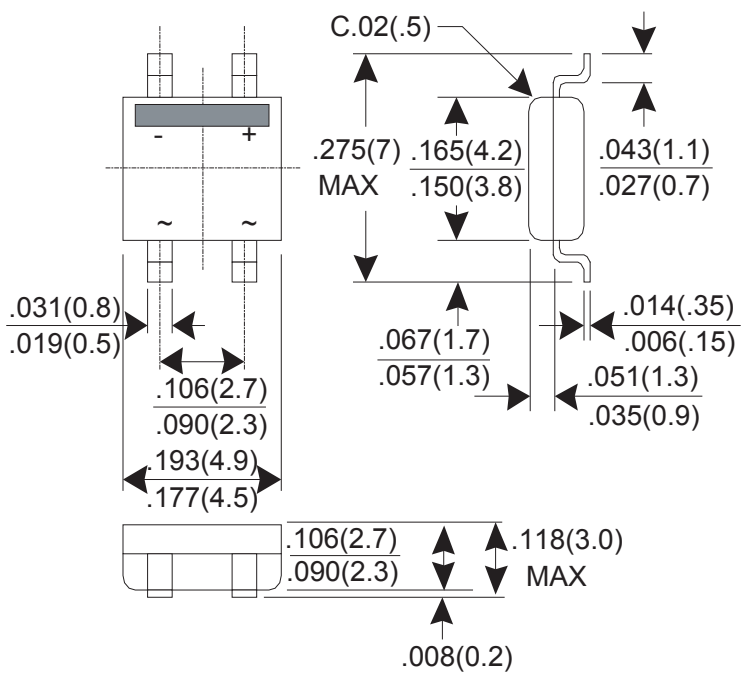

*Dimensions in inches and (millimeters)