SHEET OF

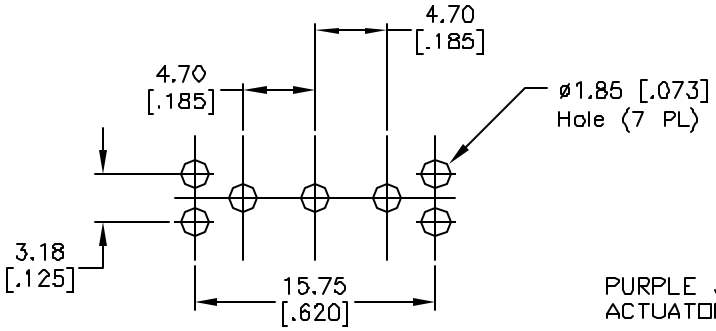

RECOMMENDED P.C.B. LAYOUT

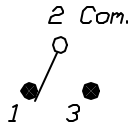

CIRUIT: SPDT

SWITCH FUNCTION		
POS. 1	POS. 2	POS. 3
(ON)	OFF	(ON)
2-3	OPEN	2-1

( )= Momentary

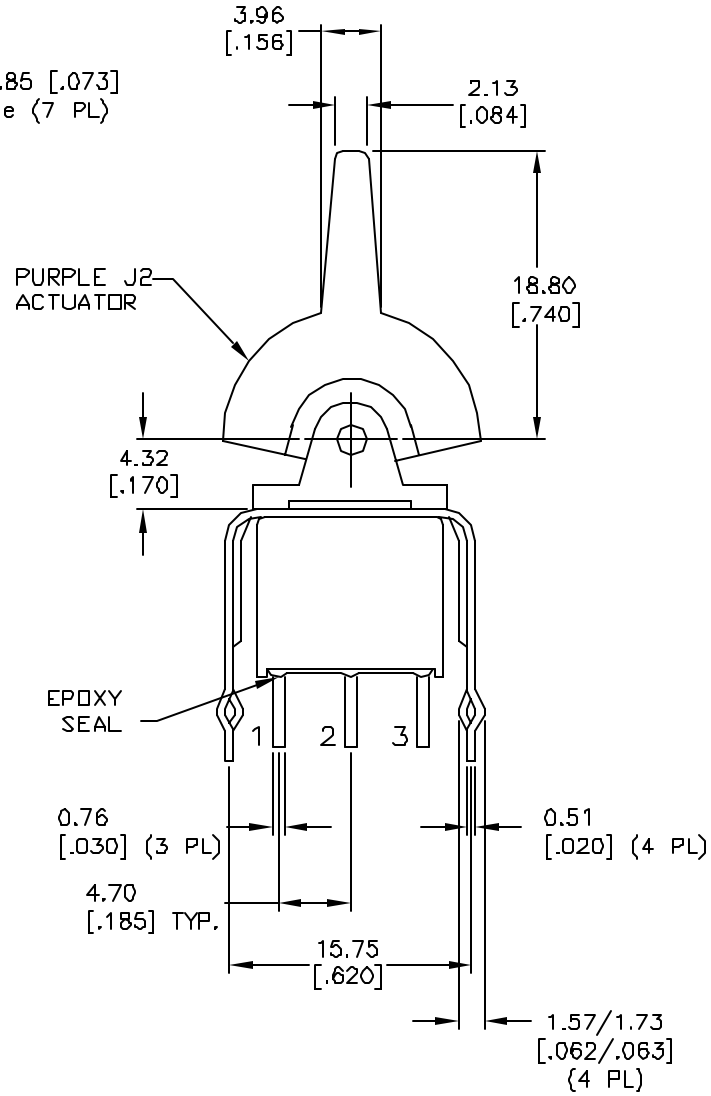

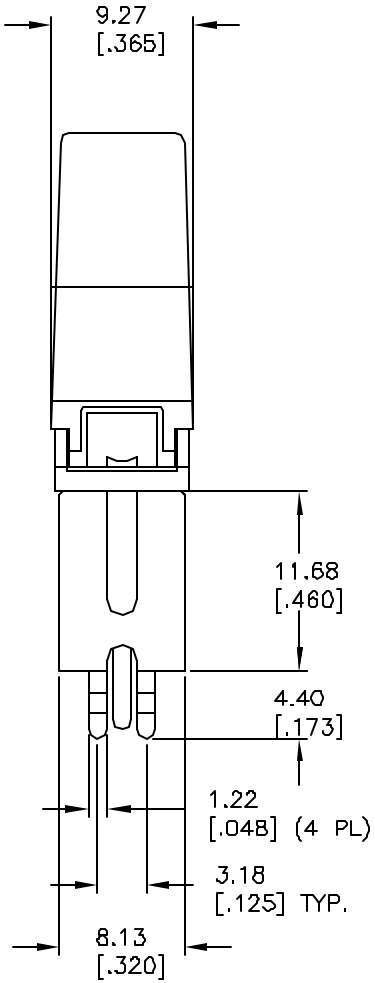

NOTES:

1. ALL DIMENSIONS IN MM [INCH]
2. GENERAL TOLERANCE: X.X=±0.4
   X.XX=±0.25
3. TERM. NOS. FOR REFERENCE ONLY.
4. RATING: 0.4VA max. @20V max. (AC or DC)

REV.	ECN No.	DESCRIPTION	DATE	CHKD
A	11571	RELEASED FOR PRODUCTION	7/16/01	CJB

THE INFORMATION CONTAINED IN THIS DOCUMENT IS PROPRIETARY TO E-SWITCH AND IS NOT TO BE COPIED OR TRANSFERRED

E-SWITCH®

TITLE				
300A WSP-4 J2 (PUR) VS21 R E				
SCALE 2:1	DATE 7/16/01	DR CJB	DWG T301495	REV A