Premium Power 10mm Pure White LED
OSW5D3A131U

■Features

- High Luminous LEDs
- 10mm Standard Directivity
- Superior Weather-resistance
- UV Resistant Epoxy
- Water Clear Type

■Applications

- Electronic Signs And Signals
- Illuminations
- Medical instruments light
- Other Lighting

■Outline Dimension

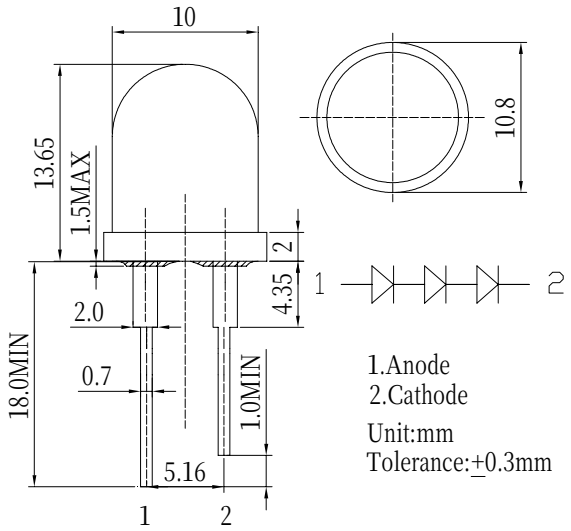

■Absolute Maximum Rating (Ta=25℃)

Item	Symbol	Value	Unit
DC Forward Current	I_F	25	mA
Pulse Forward Current*	I_{FP}	100	mA
Reverse Voltage	V_R	15	V
Power Dissipation	P_D	270	mW
Operating Temperature	Topr	-30 ~ +85	℃
Storage Temperature	Tstg	-40 ~ +100	℃
Lead Soldering Temperature	Tsol	260℃/5sec	-

*Pulse width Max 10ms , Duty ratio max 1/10

■Directivity

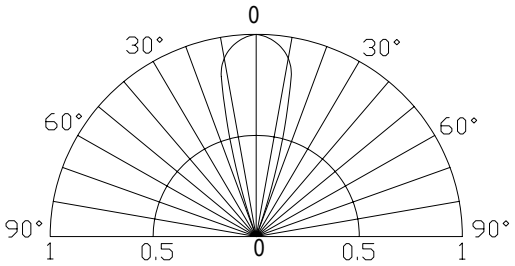

■Electrical -Optical Characteristics (Ta=25℃)

Item	Symbol	Condition	Min.	Typ.	Max.	Unit
DC Forward Voltage	V_F	I_F=20mA	8.7	9.3	10.8	V
DC Reverse Current	I_R	V_R=15V	-	-	10	μA
Luminous Intensity*	Iv	I_F=20mA	-	25000	-	mcd
Chromaticity Coordinates*	x	I_F=20mA	-	0.27	-	
	y	I_F=20mA	-	0.28	-	
50% Power Angle	$2\theta_{1/2}$	I_F=20mA	-	30	-	deg

*1 Tolerance of chromaticity coordinates ±10%
*2 Tolerance of luminous intensity is ±15%

LED & Application Technologies

ATTENTION
OBSERVE PRECAUTIONS
ELECTROSTATIC
SENSITIVE DEVICES