SEV SERIES

85℃ Standard, Lead Free Reflow Soldering

◆FEATURES

- Case Dia ϕ3~ϕ18mm
- Lead free reflow soldering is available.
- Available for high density mounting.
- RoHS compliance.

◆SPECIFICATIONS

Items	Characteristics
Category Temperature Range	−40~+85℃
Rated Voltage Range	4~100Vdc
Capacitance Tolerance	±20%(20℃,120Hz)
Leakage Current(MAX)	I=0.01CV or 3μA whichever is greater.(After 2 minutes application of rated voltage) I=Leakage Current(μA) C=Capacitance(μF) V=Rated Voltage(Vdc)
(tanδ) Dissipation Factor(MAX)	(20℃,120Hz)

Rated Voltage (Vdc)		4	6.3	10	16	25	35	50	63	100
tanδ	ϕ4,ϕ5,ϕ6.3×5.5	0.40	0.26	0.22	0.18	0.16	0.13	0.12	−	−
	ϕ6.3×8,ϕ8~ϕ12.5	0.50	0.35	0.26	0.20	0.16	0.14	0.12	0.12	0.10
	ϕ16,ϕ18	−	0.48	0.34	0.24	0.18	0.14	0.12	0.12	0.10

When rated capacitance is over 1000μF, tanδ shall be added 0.02 to the listed value with increase of every 1000μF.

Endurance	After applying rated voltage with rated ripple current for 2000 hrs at 85℃, the capacitors shall meet the following requirements.
Capacitance Change	Within ±25% of the initial value.
Dissipation Factor	Not more than 200% of the specified value.
Leakage Current	Not more than the specified value.

Low Temperature Stability Impedance Ratio(MAX) (120Hz)

Rated Voltage (Vdc)	4	6.3	10	16	25	35	50	63	100
Z(−25℃)/Z(20℃)	7	4	3	2	2	2	2	2	2
Z(−40℃)/Z(20℃)	15	8	8	4	4	3	3	5	5

◆MULTIPLIER FOR RIPPLE CURRENT

Frequency(Hz)		60(50)	120	500	1k	10k≦
Coefficient	0.47~1μF	0.50	1.00	1.20	1.30	1.50
	2.2~4.7μF	0.65	1.00	1.20	1.30	1.50
	10~47μF	0.80	1.00	1.20	1.30	1.50
	100~1000μF	0.80	1.00	1.10	1.15	1.20
	2200~10000μF	0.80	1.00	1.05	1.10	1.15

◆MARKING

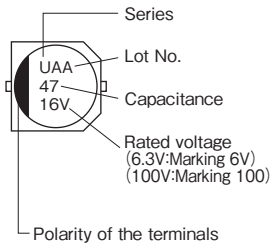

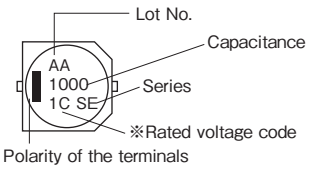

※Voltage code

Rated Voltage (Vdc)	6.3	10	16	25	35	50	63	100
Rated Voltage code	0J	1A	1C	1E	1V	1H	1J	2A

◆PART NUMBER

□□□	SEV	□□□□□	□	□□□	D×L
Rated Voltage	Series	Capacitance	Capacitance Tolerance	Option	Case Size

◆DIMENSIONS

(mm)

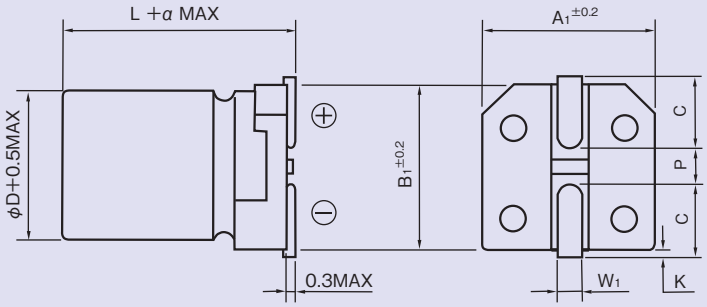

φD	L	A1	B1	C	W1	P	K	α
4	5.5	4.3	4.3	1.8	0.5~0.8	1.0	0.5 MAX	0
5	5.5	5.3	5.3	2.2	0.5~0.8	1.3	0.5 MAX	0
6.3	5.5	6.6	6.6	2.7	0.5~0.8	1.8	0.5 MAX	0
6.3	8	6.6	6.6	2.7	0.5~0.8	1.8	0.5 MAX	0
8	6.5	8.3	8.3	3.4	0.5~0.8	2.2	0.5 MAX	0
8	10.5	8.3	8.3	2.9	0.8~1.1	3.1	0.5 MAX	0
10	10.5	10.3	10.3	3.2	0.8~1.1	4.5	0.5 MAX	0
12.5	13.5	13	13	4.9	0.8~1.1	4.5	0.7±0.4	0.5
12.5	16	13	13	4.9	0.8~1.1	4.5	0.7±0.4	0.5
16	16.5	17	17	6	1.0~1.6	6.8	0.7±0.4	0.5
16	21.5	17	17	6	1.0~1.6	6.8	0.7±0.4	0.5
18	16.5	19	19	7	1.0~1.6	6.8	0.7±0.4	0.5
18	21.5	19	19	7	1.0~1.6	6.8	0.7±0.4	0.5

◆STANDARD SIZE

Size φD×L(mm), Rated Ripple Current (mA r.m.s./85℃, 120Hz)

Vdc / Cap(μF)	4		6.3		10		16		25		35		50		63		100	
	Size	Ripple	Size	Ripple	Size	Ripple	Size	Ripple	Size	Ripple	Size	Ripple	Size	Ripple	Size	Ripple	Size	Ripple
0.47													4×5.5	4.0				
1													4×5.5	8.4				
2.2													4×5.5	14				
3.3													4×5.5	17				
4.7									4×5.5	18	4×5.5	18	4×5.5 5×5.5	18 22				
10							4×5.5	25	4×5.5	25	5×5.5	30	5×5.5 6.3×5.5	30 35			8×10.5	90
22			4×5.5	29			4×5.5 5×5.5	30 39			6.3×5.5	48	6.3×5.5 8×6.5	48 80	8×10.5	75	8×10.5	130
33	4×5.5	28			4×5.5 5×5.5	32 43	5×5.5	43	6.3×5.5	54	6.3×5.5	58	6.3×8 8×10.5	95 200	8×10.5	160	10×10.5	170
47	4×5.5	34	4×5.5 5×5.5	36 46			5×5.5 6.3×5.5	50 60	6.3×5.5	60	6.3×8 8×6.5	105 115	8×10.5 10×10.5	240 280	8×10.5	170	12.5×13.5	250
100	5×5.5	61	5×5.5 6.3×5.5	61 71	6.3×5.5	71	6.3×5.5 8×6.5	86 135	6.3×8 8×6.5	145 160	8×10.5 10×10.5	280 480	8×10.5 10×10.5	320 500	10×10.5	240	12.5×16	440
220	6.3×5.5	96	6.3×5.5	96	6.3×8 8×6.5	175 190	6.3×8 8×10.5	165 290	8×10.5 10×10.5	300 560	10×10.5	570	12.5×13.5	580	12.5×16	580	16×21.5 18×16.5	665
330			6.3×8 8×6.5	190 210	8×10.5	330	8×10.5 10×10.5	330 670	10×10.5	680			12.5×13.5	600	18×16.5	680	18×21.5	825
470	6.3× 8	200	8×10.5	380	8×10.5 10×10.5	380 680	8×10.5 10×10.5	385 690	12.5×13.5	700	12.5×13.5	700	16×16.5	740	16×21.5 18×16.5	850		
1000			10×10.5	700	12.5×13.5	710	12.5×13.5	720	12.5×16	820	16×16.5	1000	18×21.5	1150				
2200			12.5×16	890	12.5×16	960	16×16.5	1150	16×21.5 18×16.5	1350	18×21.5	1550						
3300			16×16.5	1200	16×16.5	1300	16×21.5 18×16.5	1450	18×21.5	1700								
4700			16×16.5	1400	16×21.5 18×16.5	1500	18×21.5	1750										
6800			16×21.5 18×16.5	1650	18×21.5	1850												
10000			18×21.5	2000														