Glenair Mighty Mouse Series 804 Push/Pull USB 3.0 Flash Drive

808-001

How To Order						
Sample Part Number	**808-001**	**A**	**ZNU**	**A**	**32**	**R**
Series/Basic Number	**808-001** = 804 Push/ Pull Style USB 3.0 Flash Drive					
Connector Designator	**A** - Plug w/ pins **B** - Plug w/ sockets **C** - Receptacle w/ pins **D** - Receptacle w/ sockets					
Finish Code	**C** = Aluminum / Black Anodize (Non-Conductive) RoHS Compliant **M** = Aluminum / Electroless Nickel RoHS Compliant **NF** = Aluminum / Cadmium with Olive Drab Chromate **ZN** = Aluminum / Zinc-Nickel with Olive Drab Chromate **ZNU** = Aluminum / Zinc-Nickel with Black Chromate **MT** = Aluminum / Nickel-PTFE RoHS Compliant **Z1** = Stainless Steel / Passivated RoHS Compliant					
Shell Key	**A**, **B**, **C**, or **D**; Omit for single Master Key					
Storage Size	**8**, **16**, **32**, or **64**					
Protective Cover	**P** - Metal Cover **R** - Rubber Cover **Omit** = no cover					

Glenair Mighty Mouse Series 804 USB 3.0 flash drive featuring a push/pull 804 series ruggedized interface and available in 8GB, 16GB, 32GB, or 64GB storage capacities. Optional metal or rubber covers available. Flash drive complies with USB 2.0 standard and is backwards compatible.

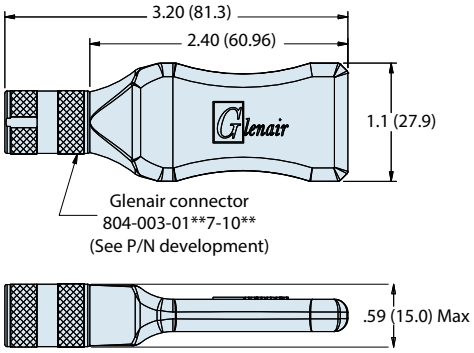

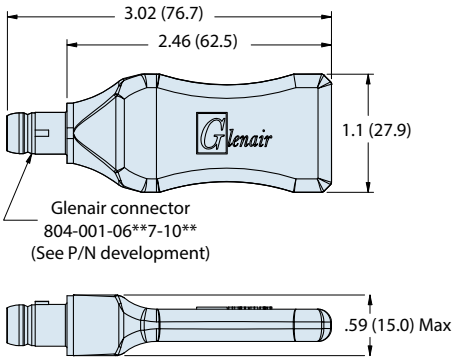

WIRING DIAGRAM

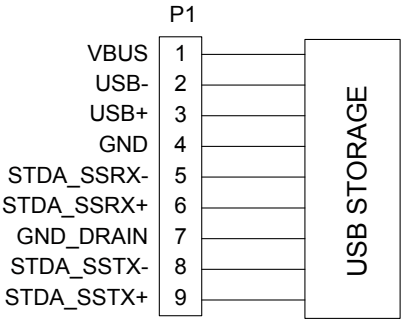

NOTES:

USB flash memory specifications

- Storage capacity: 8GB,16GB,32GB,64 GB (see p/n development)
- System requirements: Windows 2000, XP, Vista, Windows 7
- Compatibility: plug & play, USB 2.0 compliance
- Interface: USB 3.0, 1 X 9 pins
- Data transfer rates: up to 90 MB/Sec read, 16 MB/Sec write depending on host hardware, software & usage
- Password protection and AES encryption (only supported by Windows XP & Vista)

Materials and finishes

- Connector - various see 804-001 804-003 connector drawings
- Mold body - Polyurethane
- Lanyard - nylon rope*
- *Optional equipment (see P/N development)

Environmental parameters

- Operating temperature: -40°C to 85°C
- Storage temperature: -40°C to 85°C
- Humidity operating range: 10% to 70%

Dimensions in Inches (millimeters) are subject to change without notice.

© 2014 Glenair, Inc.

GLENAIR, INC. • 1211 AIR WAY • GLENDALE, CA 91201-2497 • 818-247-6000 • FAX 818-500-9912
www.glenair.com E-Mail: sales@glenair.com