Rev	AWO #	Description	Date	Appr
-	9679	RELEASED	8/28/09	

APPROVED: _____

DATE: _____ TITLE: _____

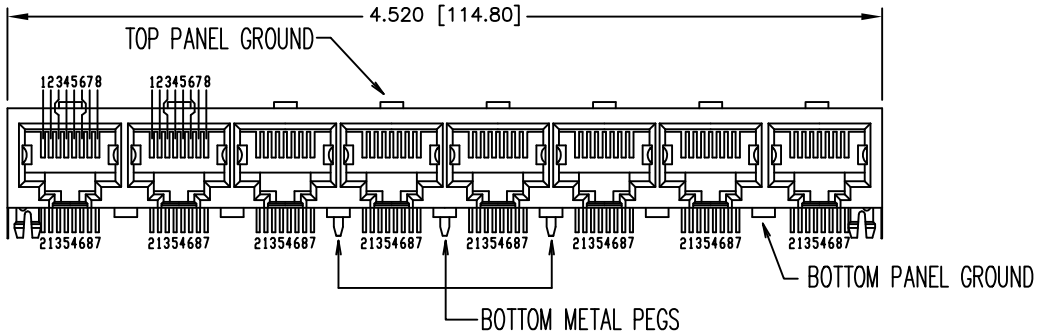

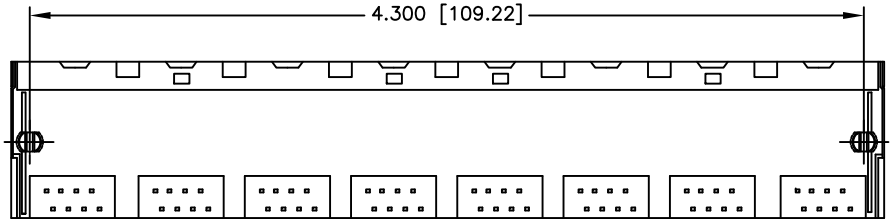

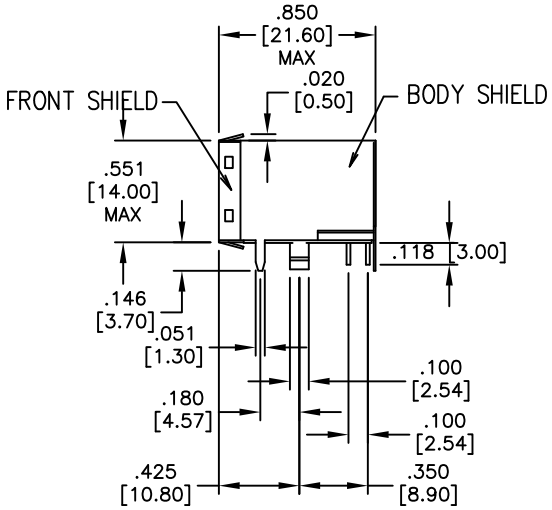

RECOMMENDED PCB LAYOUT

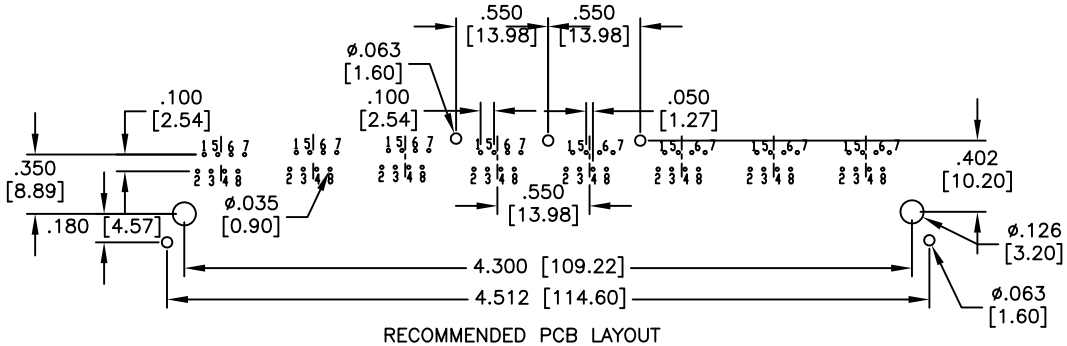

RECOMMENDED PCB LAYOUT

SPECIFICATIONS:

Material:
Insulator: PBT, rated UL 94V–0
Insulator color: Black
Contacts: Phosphor Bronze
Shield: Copper Alloy, Nickel plated

Plating:
Gold over Nickel underplate on contact area,
Tin over Copper underplate on PCB tails.
(See chart for thickness)

Electrical:
Operating voltage: 150 VAC max
Current rating: 1.5 Amps max
Contact resistance: 20 mohms max
Insulation resistance: 1000 Mohms min @ 500 VDC
Dielectric withstanding voltage: 1000 VAC for 1 minute

Temperature Rating:
Operating temperature: –40°C to +125°C

Environmental:
Lead free, RoHS compliant.
Recommended soldering temp: 235°C for 5 sec.

RoHS COMPLIANT

"X"	PLATING
0	15 uin Gold
1	30 uin Gold
2	50 uin Gold

UNLESS OTHERWISE SPECIFIED
ALL DIMENSIONS ARE MM [INCHES]
TOLERANCES: EXCEPT AS NOTED

INCHES		HOLES	
.X	± .10	Ø.X	±.10
.XX	± .020	Ø.XX	±.015
.XXX	± .015	Ø.XXX	±.010

APPROVALS		DATE
DRAWN	DY	8/28/09
CHECKED		
APPROVED		

ADAM TECH
909 Rahway Avenue, Union, NJ 07083
Phone: 908–687–5000 Fax: 908–687–0214

TITLE
MODULAR TELEPHONE JACK, R/A
GANGED, PCB, 8 PORT, 8P8C, CAT 5e

SIZE	PART NO.	REV.
X	MTJG-8-88TX1-FSG-PG-C5E	-

REF: S00065T | SCALE: NTS | SHEET 1 OF 1