SHEET OF

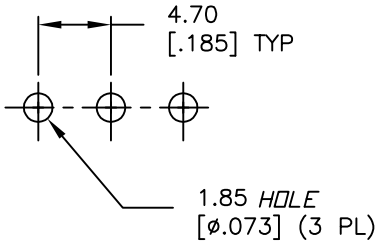

RECOMMENDED PCB LAYOUT

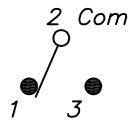

CIRCUIT: SPDT

SWITCH FUNCTION		
POS. 1	POS. 2	POS. 3
ON	OFF	(ON)
2-3	OPEN	2-1

( )=Momentary

NOTES:
1. ALL DIMENSIONS IN MM [INCH]
2. GENERAL TOLERANCE: X.X=±0.4
   X.XX=±0.25
3. TERMINAL NUMBERS FOR REF ONLY
▲4. RATING: 5A @120VAC or 28VDC
   2A @250VAC (w/RESISTIVE LOAD)
5. FIXED TERM. & MOVING CONTACT:
   Cu Alloy w/Silver plate
6. ELECTRIC LIFE: 40,000 make-and-break cycles at full load.
7. INSULATION RESISTANCE: 1,000 Mega-ohm min.
8. DIELECTRIC STRENGTH: 1,000 V RMS @sea level.
9. OPERATING TEMP.: -30°C to 85°C
10. ▲ DENOTES CRITICAL PARAMETER
11. 2002/95/EC (ROHS) COMPLIANT
▲12. HARDWARE TO BE SUPPLIED IN BULK:
   T100011-LOCK WASHER QTY-1
   T100015-LOCK RING QTY-1
   T100000-HEX NUT QTY-2

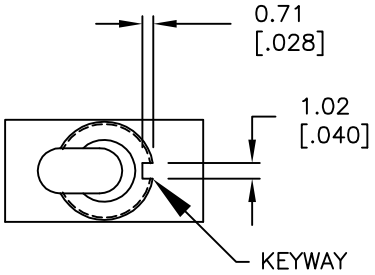

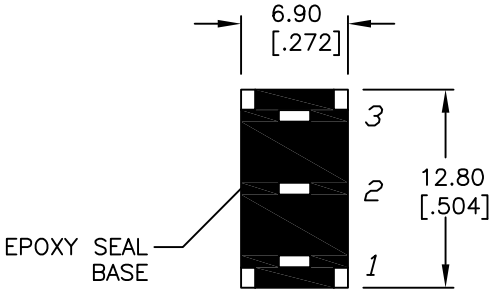

BOTTOM VIEW

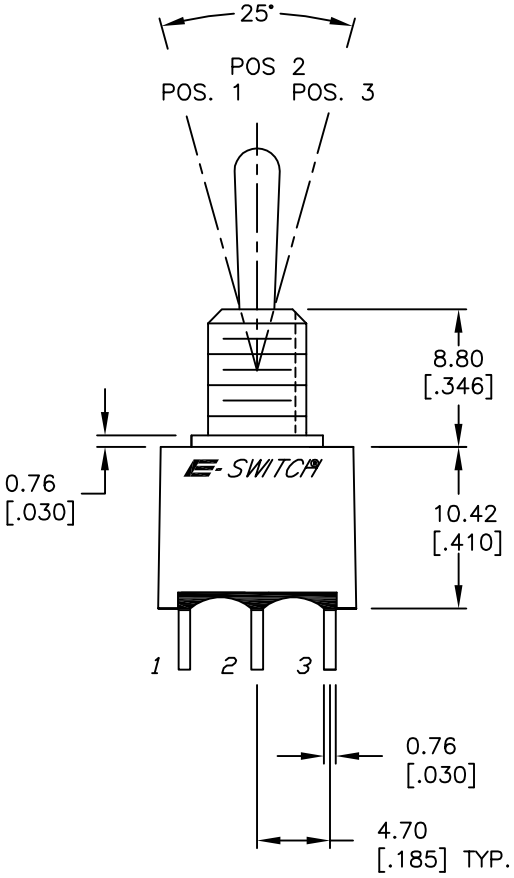

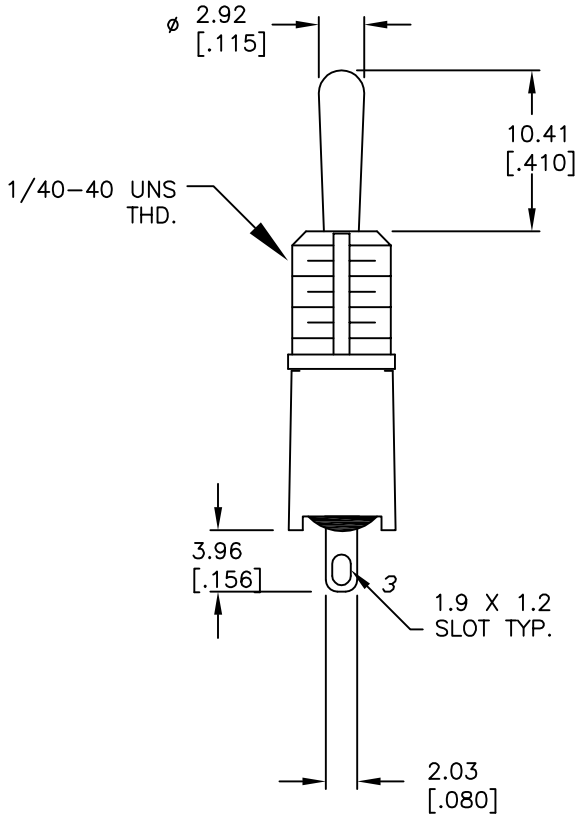

REV.	ECN No.	DESCRIPTION	DATE	CHKD
B	17804	CHANGED BUSHING DIMENSIONS	10/25/07	BF
A	17701	RELEASED FOR PRODUCTION	9/20/07	BF

THE INFORMATION CONTAINED IN THIS DOCUMENT IS PROPRIETARY TO E-SWITCH AND IS NOT TO BE COPIED OR TRANSFERRED

E-SWITCH®

TITLE 100AWSP5T1B1M1QEH

SCALE	DATE	DR	DWG	REV
2:1	10/25/07	BF	ST105005	B