APPROVED: _____

DATE: _____ TITLE: _____

Rev	AWO #	Description	Date	Appr
-		RELEASED	12/16/05	
A		GENERAL REVISION	04/03/06	
B		SPEC. ADDED	04/04/06	
C		INSIDE DIMENSIONS ADDED	07/02/07	BAS
D		REVISED DIM.	05/15/08	
E		ADD DECA BDE/ HALOGEN FREE TO SPECS	6/11/08	
F		REVISED DIM.	7/31/08	
G		REVISED DIM.	4/09/10	

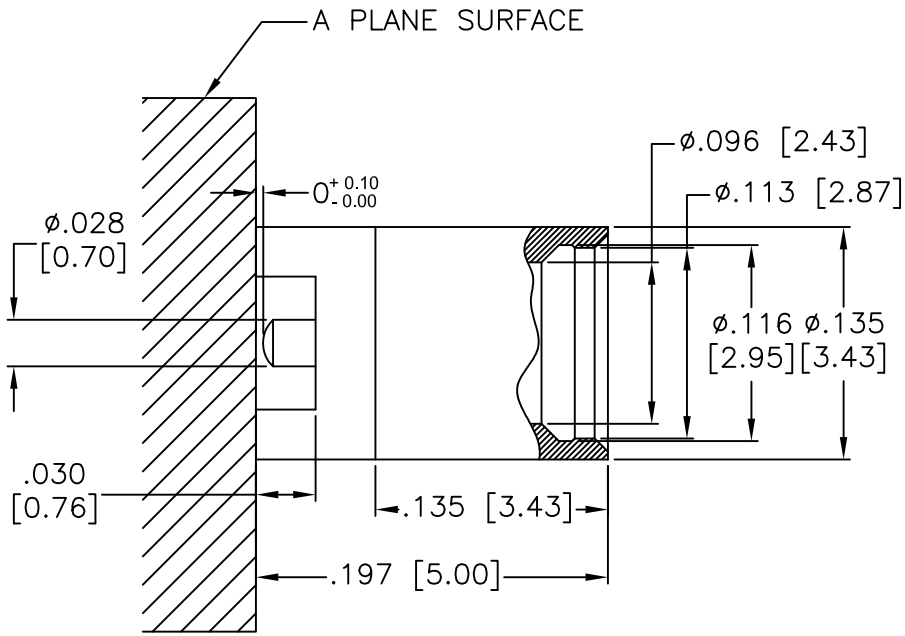

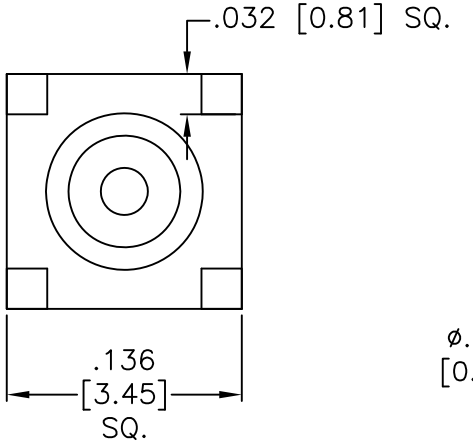

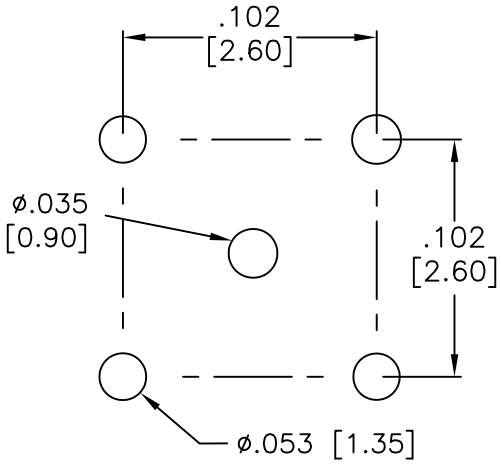

(1) ø1.0 MIN
(4) ø1.4 MIN
MOUNTING HOLE

NO	Description	Q'ty	Material	Finish
3	PIN	1	BERYLLIUM COPPER	GOLD
2	INSULATOR	1	TEFLON	NONE
1	BODY	1	BRASS	GOLD

SPECIFICATIONS:

Electrical:

Operating voltage: 170 VAC max
Current rating: 1.3 Amps max
Contact resistance: 5 Milliohms max
Insulation resistance: 1000 Mohms min
Impedance: 50 ohm
Frequency Range: 0–6 GHz
Dielectric withstanding voltage: 500 VAC for 1 minute

Temperature Rating:

Operating temperature: –65°C to +125°C

Mechanical:

Durability: 500 cycles min.
Contact retention: 2.3 lbs.
Engagement force: 3.4 lbs. max
Disengagement force: 1.4 lbs.– 3.4 lbs.

Environmental:

Deca BDE – Halogen Free
Lead free, RoHS compliant.
Recommended soldering temp: 235°C for 5 sec.

RoHS COMPLIANT

UNLESS OTHERWISE SPECIFIED
ALL DIMENSIONS ARE MM [INCHES]
TOLERANCES: EXCEPT AS NOTED

INCHES		HOLES	
.X	± .10	Ø.X	±.10
.XX	± .020	Ø.XX	±.015
.XXX	± .015	Ø.XXX	±.010

APPROVALS		DATE
DRAWN	SLS	12/16/05
CHECKED		
APPROVED		

ADAM TECH
909 Rahway Avenue, Union, NJ 07083
Phone: 908–687–5000 Fax: 908–687–0214

TITLE
RF CONNECTOR, TYPE MMCX, VERTICAL, 50 OHM, PCB MOUNT

SIZE	PART NO.	REV.
X	RF12-04-T-00-50-G	G

REF: | SCALE: NTS | SHEET 1 OF 1