1214GN-500

500 Watts - 60 Volts, 300 µs, 10%
L-Band Radar 1200 - 1400 MHz

GENERAL DESCRIPTION

The 1214GN-500 is an internally matched, COMMON SOURCE, class AB, GaN on SiC HEMT transistor capable of providing over 18dB gain, 500 Watts of pulsed RF output power at 300µs pulse width, 10% duty factor across the 1200 to 1400 MHz band.

Market Application – 1214GN-500 is designed for L-Band Pulsed Radar

CASE OUTLINE
55-KR
Common Source

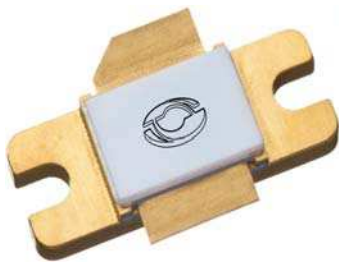

ABSOLUTE MAXIMUM RATINGS

Maximum Power Dissipation

Device Dissipation @ 25°C 1000 W

Maximum Voltage and Current

Drain-Source Voltage (V_{DSS}) 150 V
Gate-Source Voltage (V_{GS}) -8 to +0 V

Maximum Temperatures

Storage Temperature (T_{STG}) -55 to +125° C
Operating Junction Temperature +250 °C

ELECTRICAL CHARACTERISTICS @ 25°C

Symbol	Characteristics	Test Conditions	Min	Typ	Max	Units
Pout	Output Power	Pout=500W, Freq=1200,1300,1400 MHz	500	550		W
Gp	Power Gain	Pout=500W, Freq=1200,1300,1400 MHz	17	18.5		dB
ηd	Drain Efficiency	Pout=500W, Freq=1200,1300,1400 MHz	48	55		%
Dr	Droop	Pout=500W, Freq=1200,1300,1400 MHz			1.0	dB
VSWR-T	Load Mismatch Tolerance	Pout=500W, Freq= 1300MHz			3:1	
Θjc	Thermal Resistance	Pulse Width=300uS, Duty=10%			0.16	°C/W

- **Bias Condition: Vdd=+60V, Idq=100mA average current (Vgs= -2.0 ~ -4.5V typical)**
-

FUNCTIONAL CHARACTERISTICS @ 25°C

$I_{D(Off)}$	Drain leakage current	V_{gS} = -8V, V_D = 65V			10	mA
$I_{G(Off)}$	Gate leakage current	V_{gS} = -8V, V_D = 0V			8	mA
BV_{DSS}	Drain-source breakdown voltage	V_{gs} =-8V, I_D = 10mA	250			V

Export Classification: EAR-99

*For the most current data, consult MICROSEMI's website: **www.MICROSEMI.com***
Specifications are subject to change, consult the RFIS factory at (408) 986-8031 for the latest information

1214GN-500

500 Watts - 60 Volts, 300 µs, 10%
L-Band Radar 1200 - 1400 MHz

TYPICAL BROAD BAND PERFORMACE DATA

Frequency	Pin (W)	Pout (W)	Id (A)	RL (dB)	Nd (%)	G (dB)	Droop (dB)
1200 MHz	8	544	1.86	-16	52	18.36	0.6
1300 MHz	8	556	1.76	-13	55	18.45	0.5
1400 MHz	8	550	1.58	-13	61	18.4	0.4

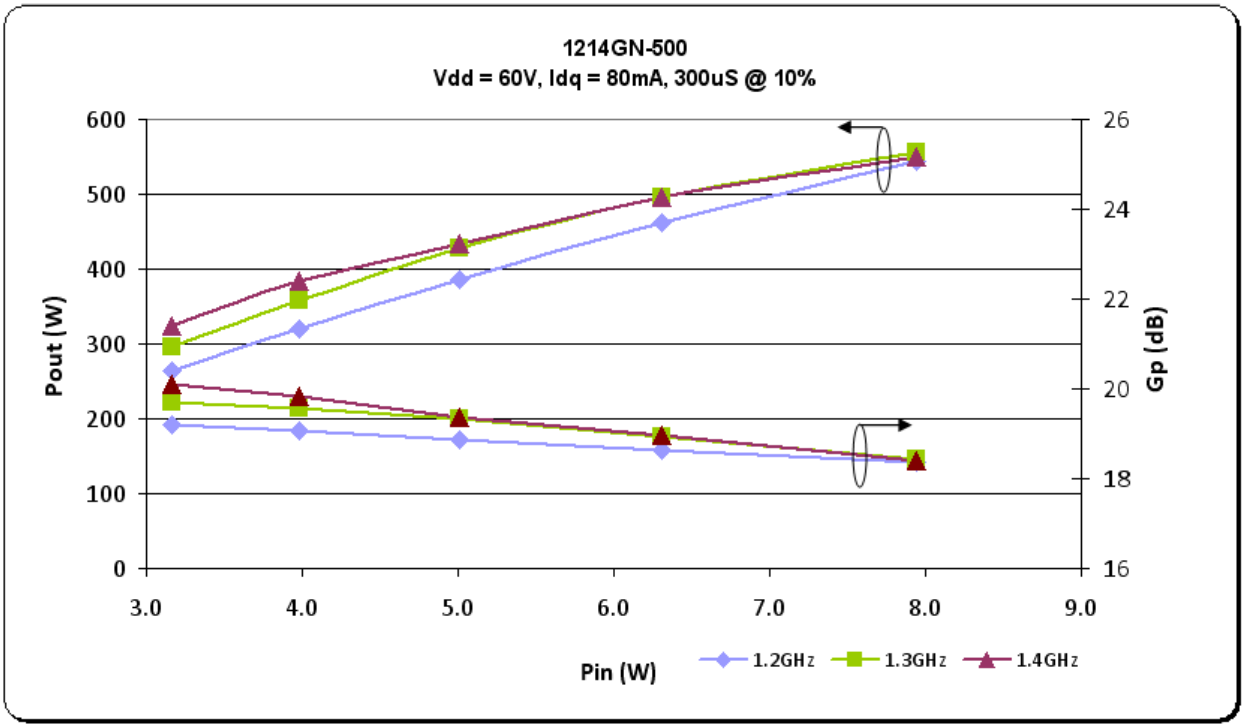

1214GN-500

500 Watts - 60 Volts, 300 µs, 10%
L-Band Radar 1200 - 1400MHz

TRANSISTOR IMPEDANCE INFORMATION

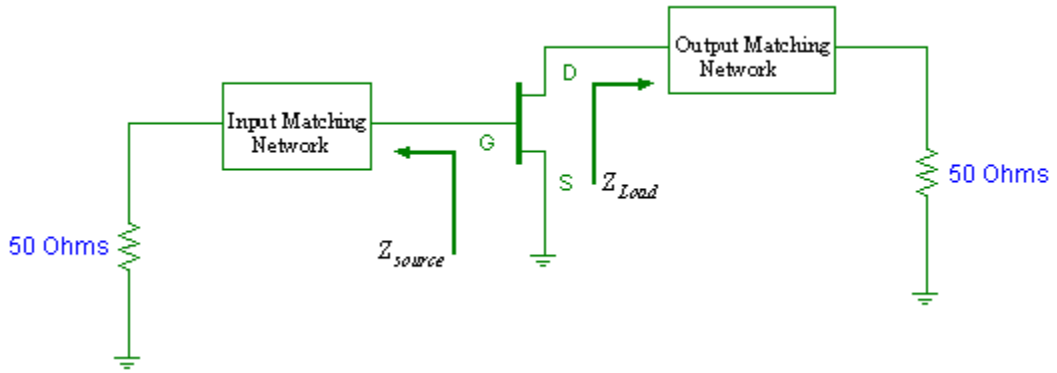

Note: $Zsource$ is looking into the input circuit;
Z_{Load} is looking into the output circuit.

Impedance Data		
Freq (GHz)	**Zs**	**Zl**
1.2	1.17 – j 1.16	2.08 – j 2.14
1.3	1.20 – j .91	2.07 – j 1.67
1.4	1.26 – j .15	2.04 – j 1.18

1214GN-500

500 Watts - 60 Volts, 300 µs, 10%
L-Band Radar 1200 - 1400 MHz

TEST CIRCUIT DIAGRAM

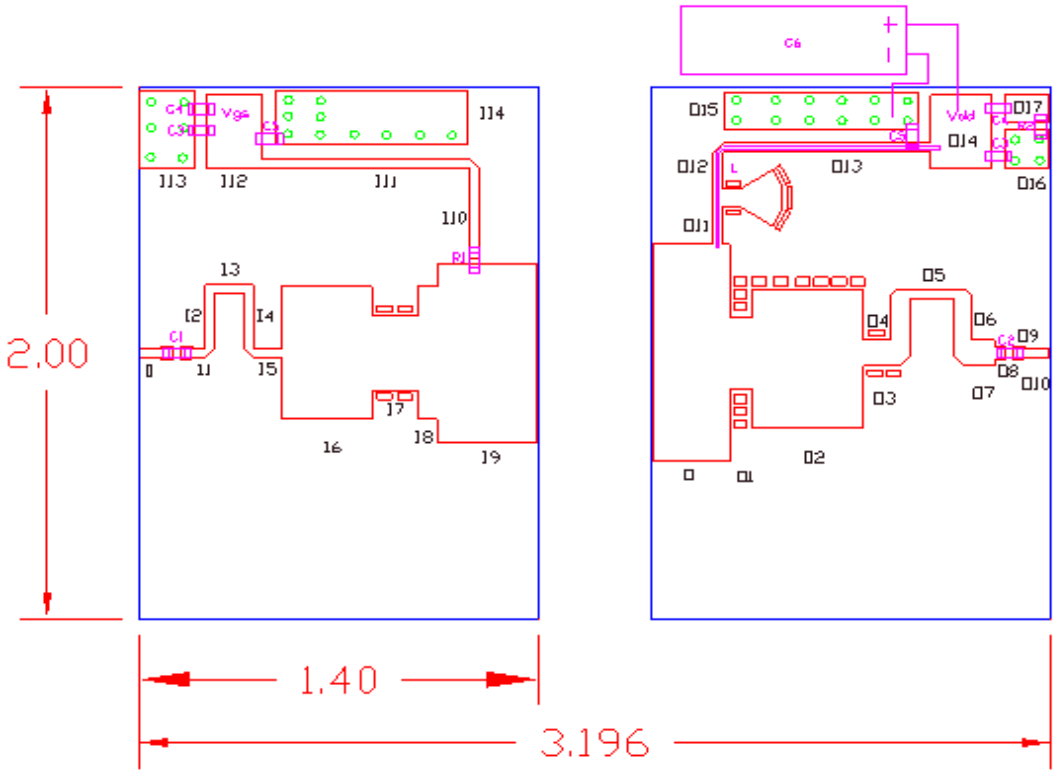

Board Material: Roger Duriod 6006 @ 25 Mil Thickness, Er=6.15

Component List			
Item	**Description**		**Value**
C1	Chip Cap A size	ATC800A1010JT250XT	100pF
C2	Chip Cap A size	ATC800A680JT250XT	68pF
C3	Chip Cap B size	ATC200B103KW50XT	10,000pF
C4	Chip Cap B size	ATC100B102102KW50XT	1000pF
C5	Chip Cap B size	ATC100B101FW1000XT	100pF
C6	Electrolytic Cap (63V)	ANY	4700uF
R1	Chip Resistor size 0805	ANY	20.5 ohms
R2	Chip Resistor size 0805	ANY	2 ohm
L	RF Choke 20 AWG Copper wire		
	L=1350 mil solder on top of the output choke		
Note:			
	Need 2x of C3,C4,C5		

Input Physical Circuit Layout		
Item	**W (mil)**	**L (mil)**
I	35	116
I1	35	84
I2	35	230
I3	35	100
I4	35	230
I5	35	100
I6	500	315
I7	280	160
I8	500	70
I9	670	350
I10	35	355
I11	35	745
I12	275	200
I13	280	190
I14	200	670

Output Physical Circuit Layout		
Item	**W (mil)**	**L (mil)**
O	820	270
O1	270	80
O2	520	390
O3	95	95
O4	70	160
O5	35	150
O6	70	160
O7	95	80
O8	47	40
O9	47	40
O10	35	85
O11	35	180
O12	35	180
O13	35	730
O14	270	200
O15	138	680
O16	150	150
O17	98	150

*For the most current data, consult MICROSEMI's website: **www.MICROSEMI.com***
Specifications are subject to change, consult the RFIS factory at (408) 986-8031 for the latest information

1214GN-500

500 Watts - 60 Volts, 300 µs, 10%
L-Band Radar 1200 - 1400 MHz

55-KR PACKAGE DIMENSION

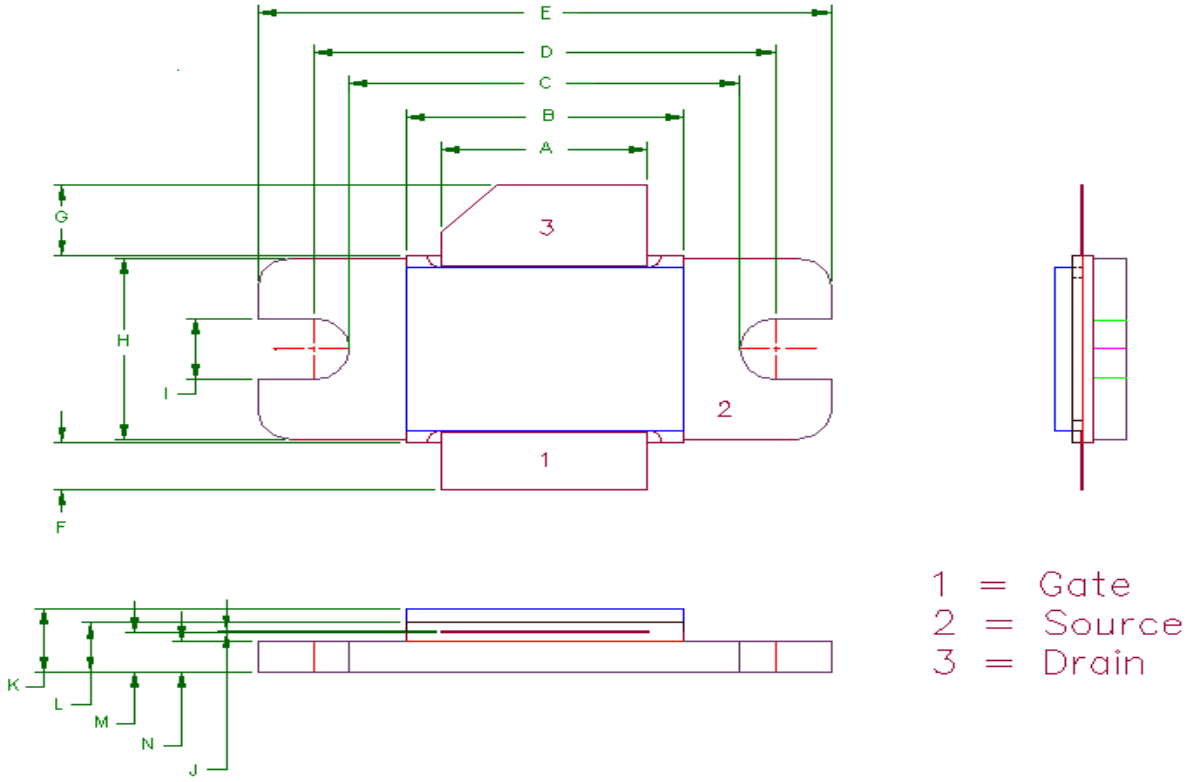

Dimension	Min (mil)	Min (mm)	Max (mil)	Max (mm)
A	370	9.40	372	9.44
B	498	12.65	500	12.7
C	700	17.78	702	17.83
D	830	21.08	832	21.13
E	1030	26.16	1032	26.21
F	101	2.56	102	2.59
G	151	3.84	152	3.86
H	385	9.78	387	9.83
I	130	3.30	132	3.35
J	003	.076	004	0.10
K	135	3.43	137	3.48
L	105	2.67	107	2.72
M	085	2.16	86	2.18
N	065	1.65	66	1.68

*For the most current data, consult MICROSEMI's website: **www.MICROSEMI.com***
Specifications are subject to change, consult the RFIS factory at (408) 986-8031 for the latest information

1214GN-500

500 Watts - 60 Volts, 300 µs, 10%
L-Band Radar 1200 - 1400 MHz

Revision History

Revision Level / Date	Para. Affected	Description
0.1 / 18 January 2013	-	Initial Preliminary Release

*For the most current data, consult MICROSEMI's website: **www.MICROSEMI.com***
Specifications are subject to change, consult the RFIS factory at (408) 986-8031 for the latest information