PART No. HJ1086HLP

for more information visit

www.hammondmfg.com

Data subject to change without notice

Isometric drawing Not to Scale

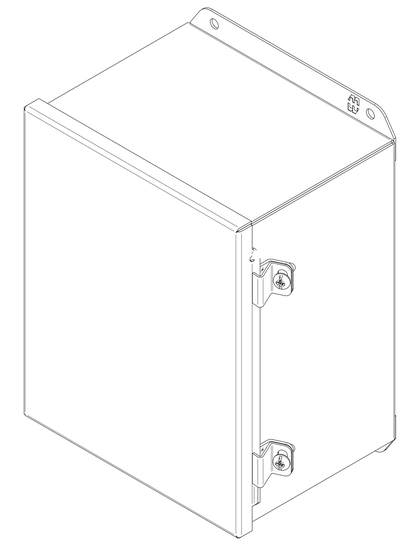

ISOMETRIC VIEW

TOP VIEW

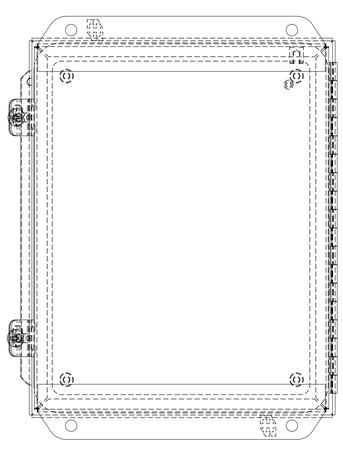

BACK VIEW

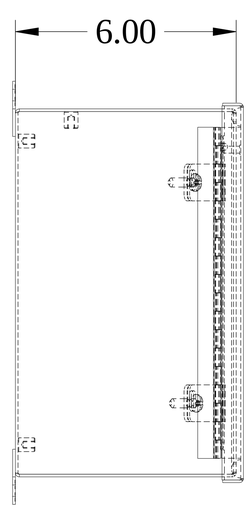

SIDE VIEW

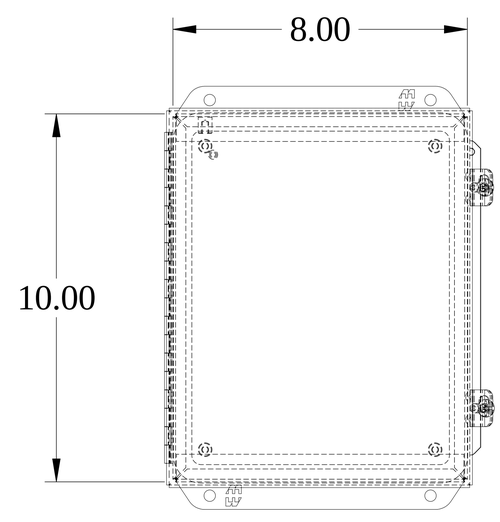

FRONT VIEW

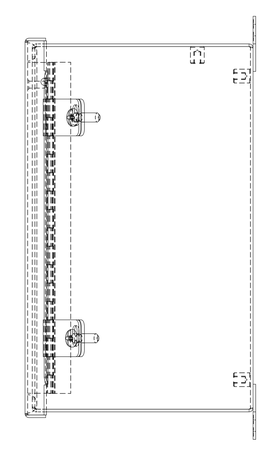

SIDE VIEW

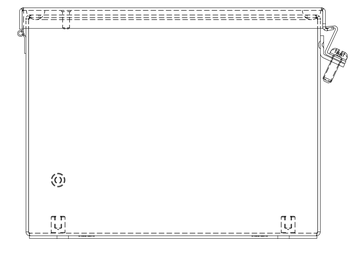

BOTTOM VIEW