0.15mmGHz BGA DIRECT MOUNT, SOLDERLESS SOCKET FOR TEST APPLICATIONS

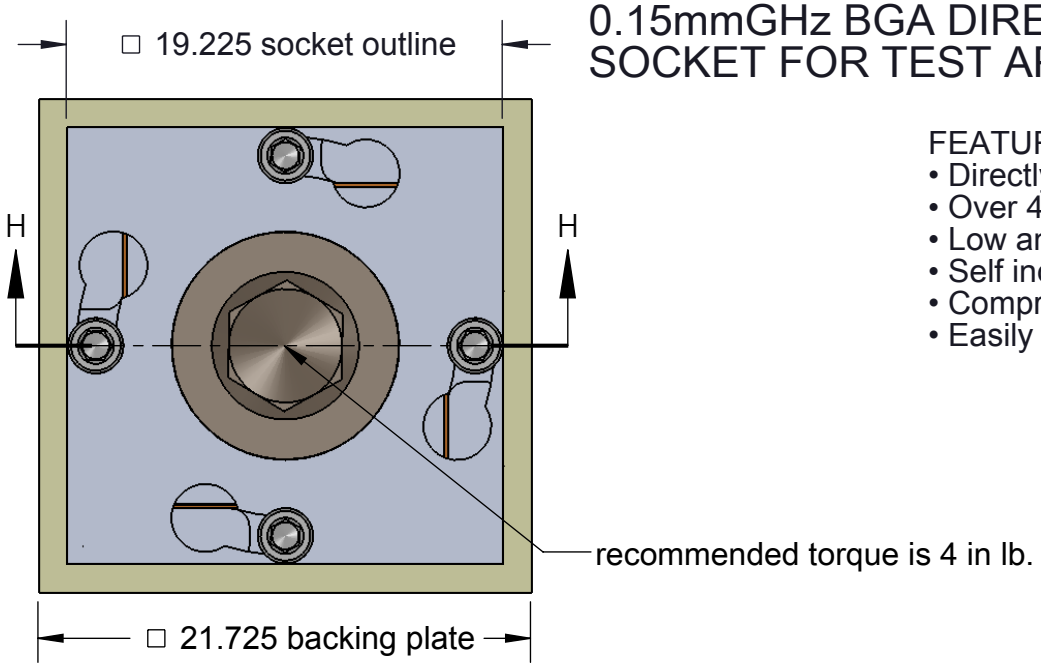

TOP VIEW

FEATURES:
- Directly mounts to target PCB (needs tooling holes) with hardware.
- Over 40GHz bandwidth @-1dB
- Low and stable contact resistance for reliable production yield.
- Self inductance under 0.025nH.
- Compression plate distributes forces evenly
- Easily removable swivel socket lid

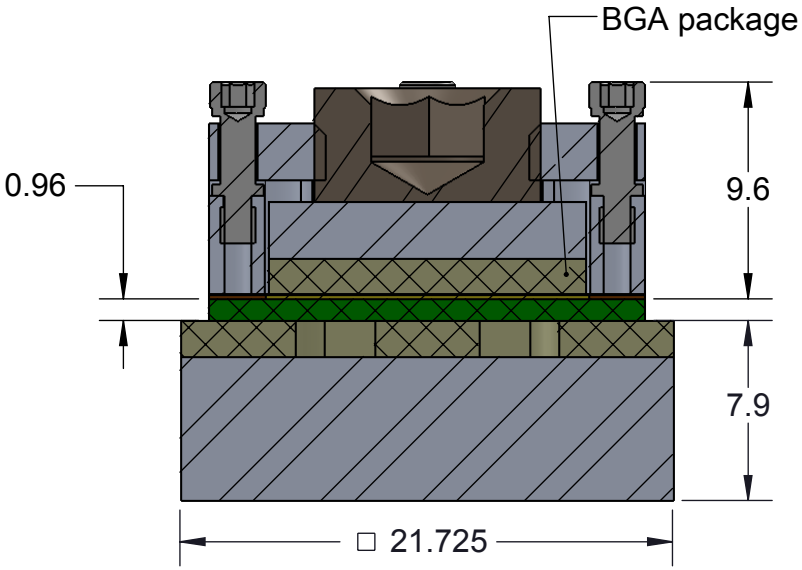

SECTION H-H

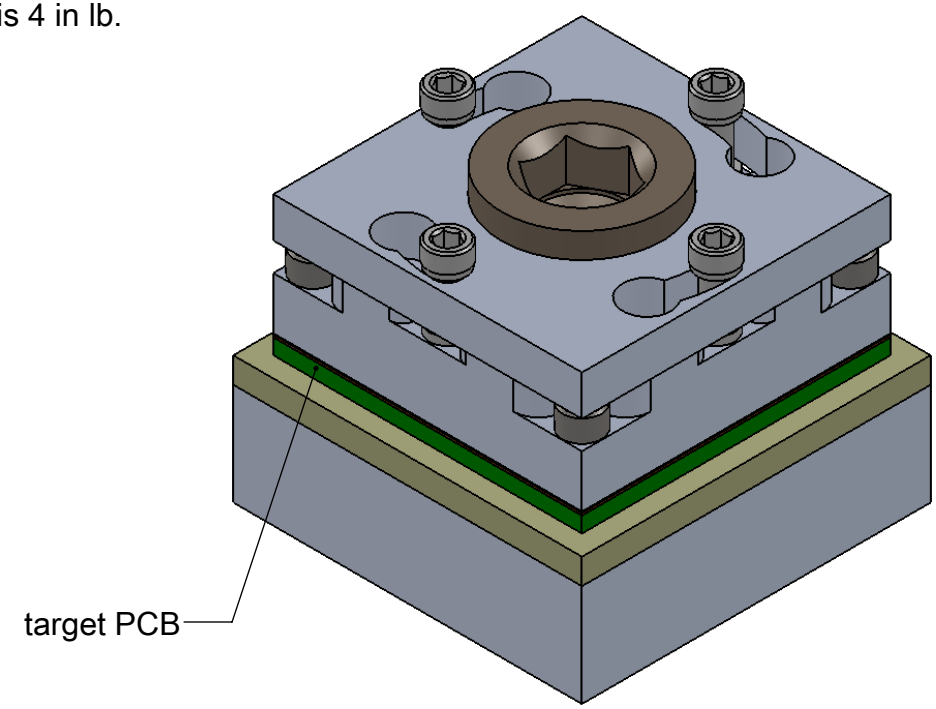

Description: SG15-BGA 14x14mm, 34x34 0.4mm pitch

Primary dimension units are millimeters, Secondary dimension units are [inches], Weight is in grams.

Tolerances: Hole diameters ±0.03mm [±0.001"], Pitches (from true position) ±0.025mm [±0.001"], substrate thickness tolerance ±10%, all other tolerances ±0.13mm [±0.005"] unless stated otherwise. Materials and specifications are subject to change without notice.

SG15-BGA-1000 Drawing	Material: Material <not specified>	STATUS: Released	SHEET: 1 OF 4	REV. A
Ironwood Electronics, Inc. Tele: (800) 404-0204 www.ironwoodelectronics.com	Finish: Weight: 17.11	ENG: V. Panavala	DRAWN BY: V. Panavala	SCALE: 3:1
		FILE: SG15-BGA-1000	DATE: 1/10/2015	

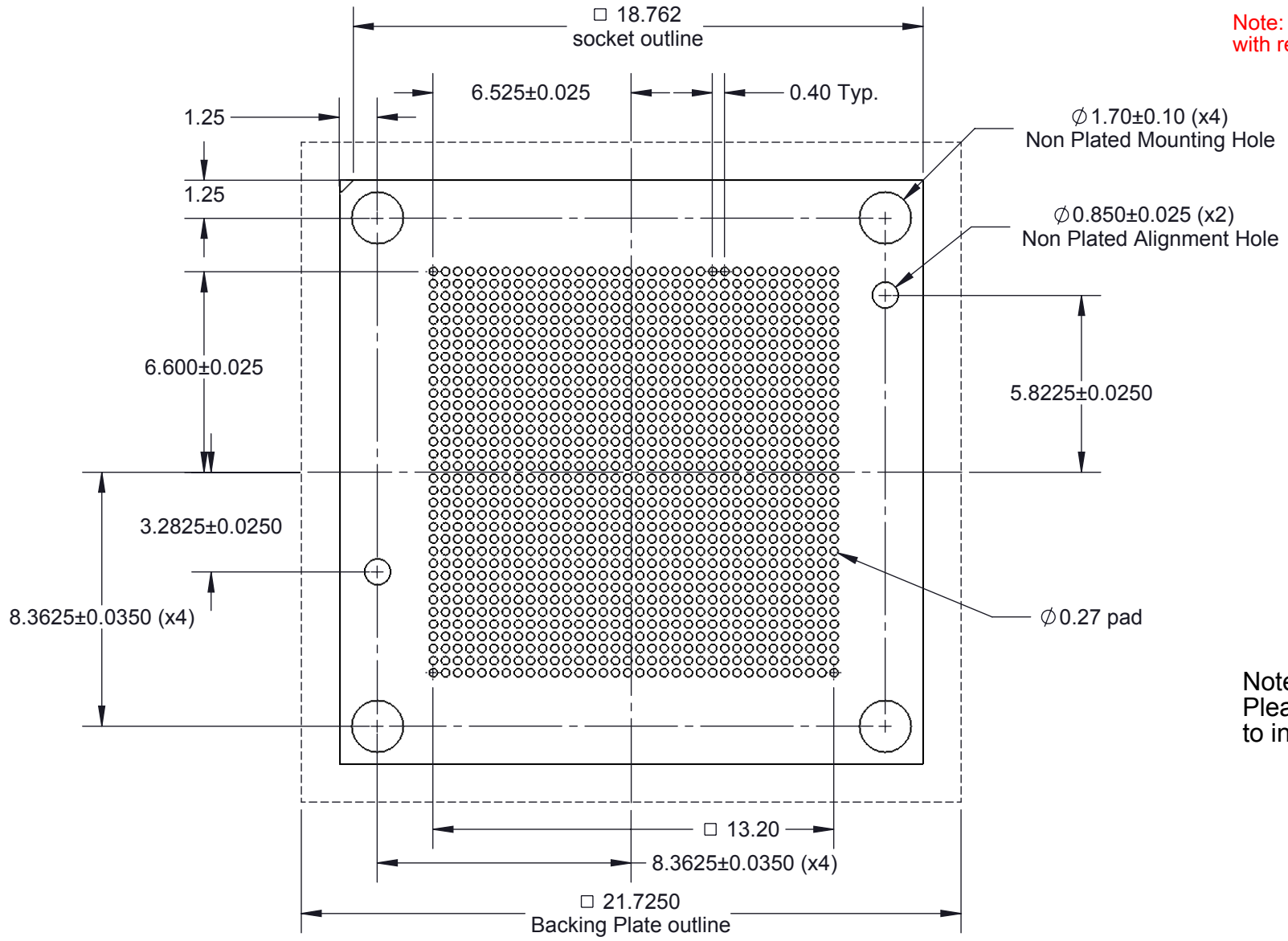

Note: BGA pattern is not symmetrical with respect to the mounting holes

Note: Full BGA pattern shown. Please adjust pattern according to individual requirements.

Target PCB Recommendations
Total thickness: 1.6mm min.
Plating: ENIPIG, Solder Finish, Hard Gold
PCB Pad height: Same or 0.001"-0.002" lower than solder mask is acceptable
Solder mask opening: 0.013"

Description: Recommended PCB Layout

Primary dimension units are millimeters, Secondary dimension units are [inches], Weight is in grams.

Tolerances: Hole diameters ±0.03mm [±0.001"], Pitches (from true position) ±0.025mm [±0.001"], substrate thickness tolerance ±10%, all other tolerances ±0.13mm [±0.005"] unless stated otherwise. Materials and specifications are subject to change without notice.

SG15-BGA-1000 Drawing	Material: Material <not specified>	STATUS: Released	SHEET: 2 OF 4	REV. A
Ironwood Electronics, Inc. Tele: (800) 404-0204 www.ironwoodelectronics.com	Finish: Weight: 17.11	ENG: V. Panavala	DRAWN BY: V. Panavala	SCALE: 5:1
		FILE: SG15-BGA-1000	DATE: 1/10/2015	

Note: Full BGA pattern shown.
Please adjust pattern according
to individual requirements.

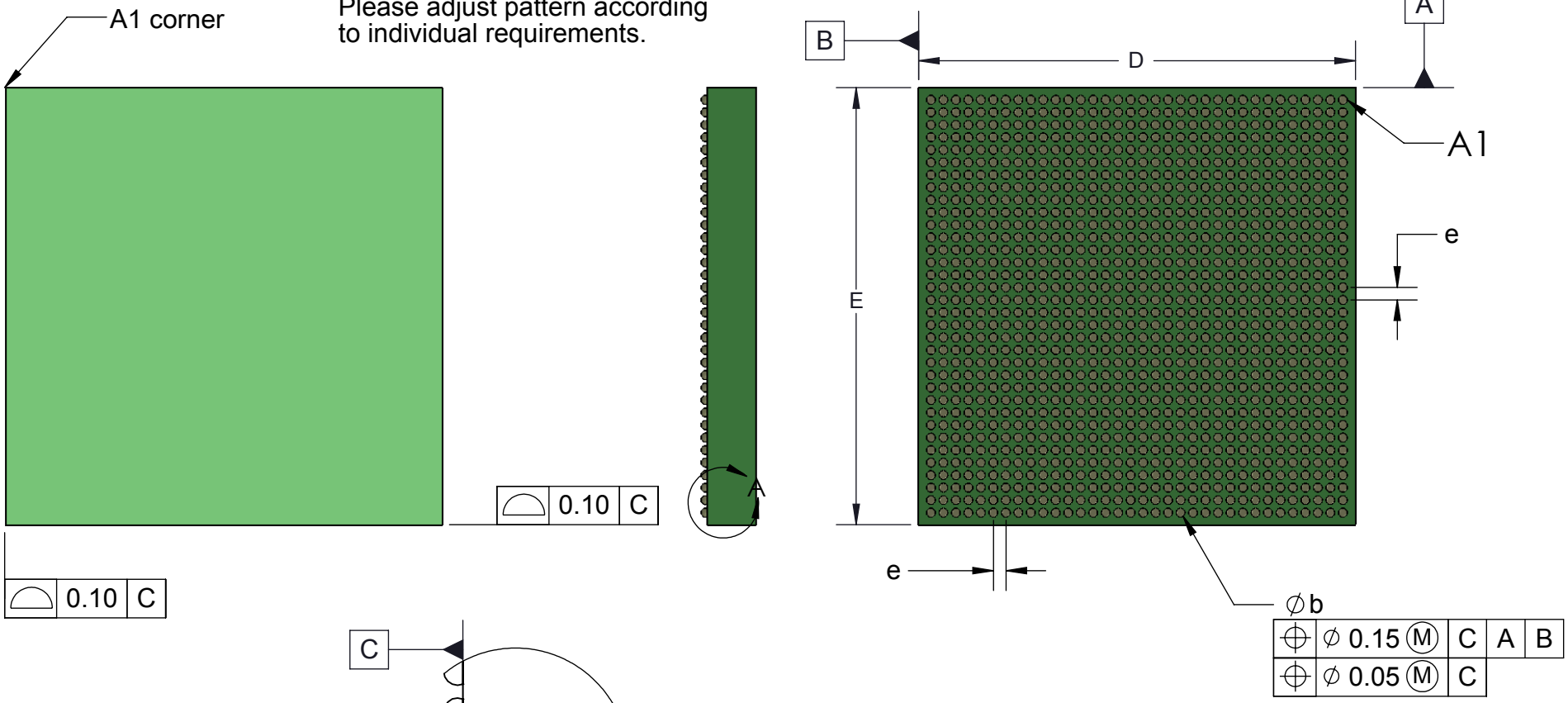

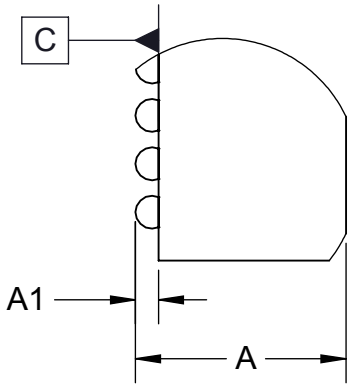

DETAIL A
SCALE 16 : 1

DIM	Minimum	Maximum
A		2.5
A1	0.15	0.23
b	0.20	0.30
D	14.0 BSC	
E	14.0 BSC	
e	0.4	
ARRAY	34x34	
PIN COUNT		1156

1. Dimensions are in millimeters.
2. Interpret dimensions and tolerances per ASME Y14.5M-1994.
3. Dimension b is measured at the maximum solder ball diameter, parallel to datum plane C.
4. Datum C (seating plane) is defined by the spherical crowns of the solder balls.
5. Parallelism measurement shall exclude any effect of mark on top surface of package.

Description: Compatible BGA

Primary dimension units are millimeters, Secondary dimension units are [inches], Weight is in grams.

Tolerances: Hole diameters ±0.03mm [±0.001"], Pitches (from true position) ±0.025mm [±0.001"], substrate thickness tolerance ±10%, all other tolerances ±0.13mm [±0.005"] unless stated otherwise. Materials and specifications are subject to change without notice.

SG15-BGA-1000 Drawing	Material: Material <not specified>	STATUS: Released	SHEET: 3 OF 4	REV. A
Ironwood Electronics, Inc. Tele: (800) 404-0204 www.ironwoodelectronics.com	Finish: Weight: 17.11	ENG: V. Panavala	DRAWN BY: V. Panavala	SCALE: 5:1
		FILE: SG15-BGA-1000	DATE: 1/10/2015	

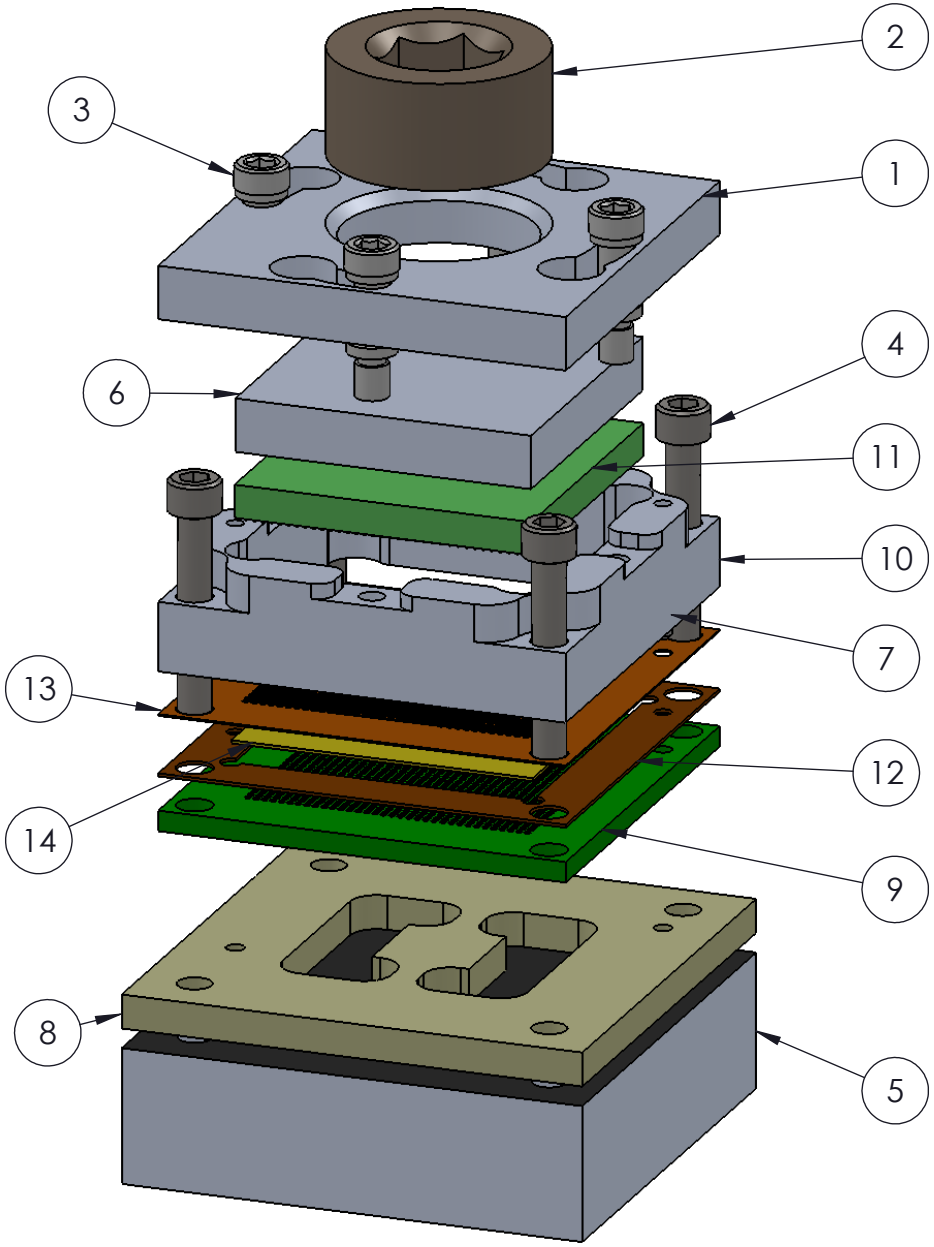

ITEM NO.	Description	Material
1	GHz Swivel Socket Lid, 14mm IC	7075-T6 Aluminum Alloy
2	Compression Screw M10	7075-T6 Alumium Alloy
3	#0-80 Shoulder Screw, 0.062" thread length	Stainless Steel (303)
4	#0-80 X .375 LG, SOC HD CAP SCREW, ALLOY STL, BLK OXIDE	Alloy Steel
5	Backing Plate, 21.725 X 21.725	7075-T6 Aluminum Alloy
6	Compression Plate, 13.95 X 13.95	7075-T6 Aluminum Alloy
7	Alignment Pin 1/32" dia. x 1/8" lng	Chrome Stainless Steel
8	Insulation Plate	FR4 Standard
9	Target PCB	Material <not specified>
10	Socket Base BGA 14x14	7075-T6 Aluminum Alloy
11	Customer's BGA 0.4mm pitch 34x34 array 14mm	High Temp FR4
12	Elastomer Guide 14mm IC 0.15mm thk	Kapton Polyimide/Cirlex
13	Ball guide 34x34 0.4mm pitch	Kapton Polyimide
14	0.15mm thick, 0.05x 0.05mm pitch, 50mm sqr, Z-axis conductive angled elastomer	20 Micron dia gold plated brass filaments arranged symettrically in a silicon rubber (63.5 degree angle), Thickness: 0.5mm

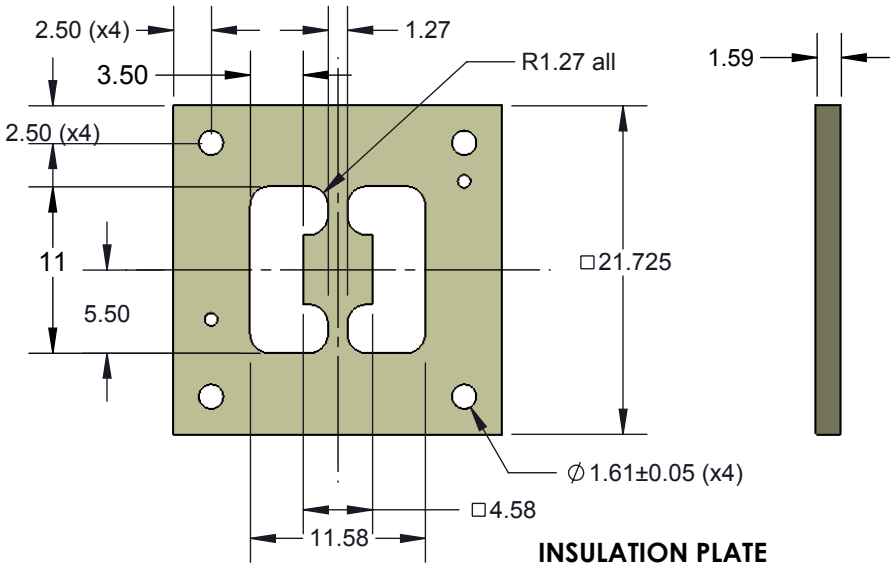

INSULATION PLATE

Description: Socket Specification

Primary dimension units are millimeters, Secondary dimension units are [inches], Weight is in grams.

Tolerances: Hole diameters ±0.03mm [±0.001"], Pitches (from true position) ±0.025mm [±0.001"], substrate thickness tolerance ±10%, all other tolerances ±0.13mm [±0.005"] unless stated otherwise. Materials and specifications are subject to change without notice.

SG15-BGA-1000 Drawing	Material: Material <not specified>	STATUS: Released	SHEET: 4 OF 4	REV. A
Ironwood Electronics, Inc. Tele: (800) 404-0204 www.ironwoodelectronics.com	Finish: Weight: 17.11	ENG: V. Panavala	DRAWN BY: V. Panavala	SCALE: 1:1
		FILE: SG15-BGA-1000	DATE: 1/10/2015	