DC axial fans

Series 8400 NU 80 x 80 x 25 mm

Highlights:
- Motor protection against reverse polarity and locking.
- Air exhaust over struts
- Connection via 310 mm strands AWG 24, TR 64, bared and tin-plated
- Ingress protection rating of IP68

Material: Housing: Fiberglass-reinforced PBT composite
Impeller: Fiberglass-reinforced PA composite

Direction of rotation: Counterclockwise, seen on rotor

Nominal Data

Type	Air flow	Nominal voltage	Voltage range	Sound pressure level	Sound power level	Ball bearings	Power input	Speed	Temperature range	Mass	Ingress Protection Rating	UL Approval	Curves
	CFM	VDC	VDC	dB(A)	Bel(A)		Watts	RPM	°C	g			
8414 NLU	**19.4**	24	18...28	17	3.7	Yes	0.8	1500	-20...70	95	IP68	Yes	1
8414 NMU	**34.1**	24	18...28	27	4.4	Yes	1.4	2600	-20...70	95	IP68	Yes	2
8412 NU	**40.6**	12	8...15	32	4.7	Yes	1.7	3100	-20...70	95	IP68	Yes	3
8414 NHU	**46.5**	24	18...26	37	5.0	Yes	2.4	3600	-20...65	95	IP68	Yes	4
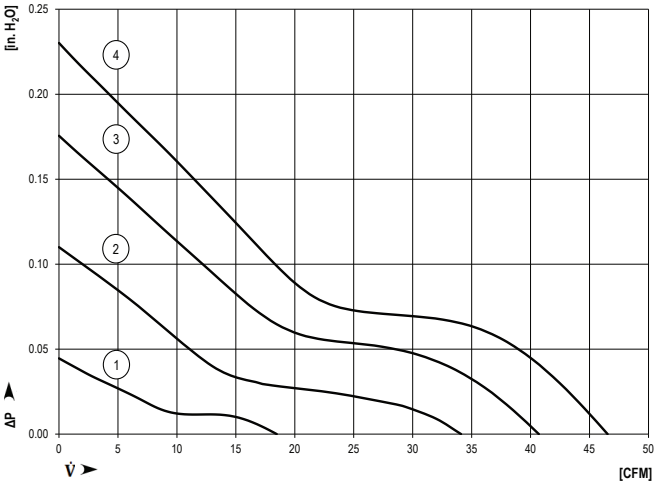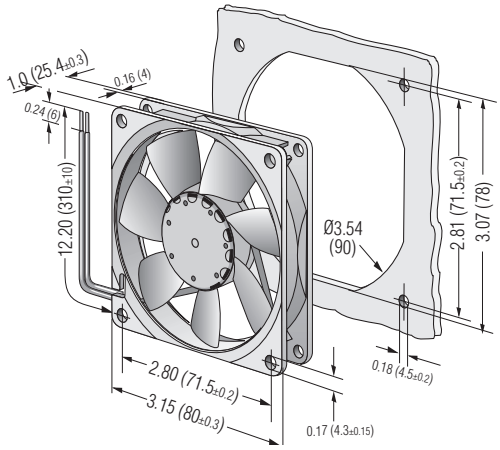
Curves